LEGO

8357

Zonic Strike

7 pull-back motor

4197577

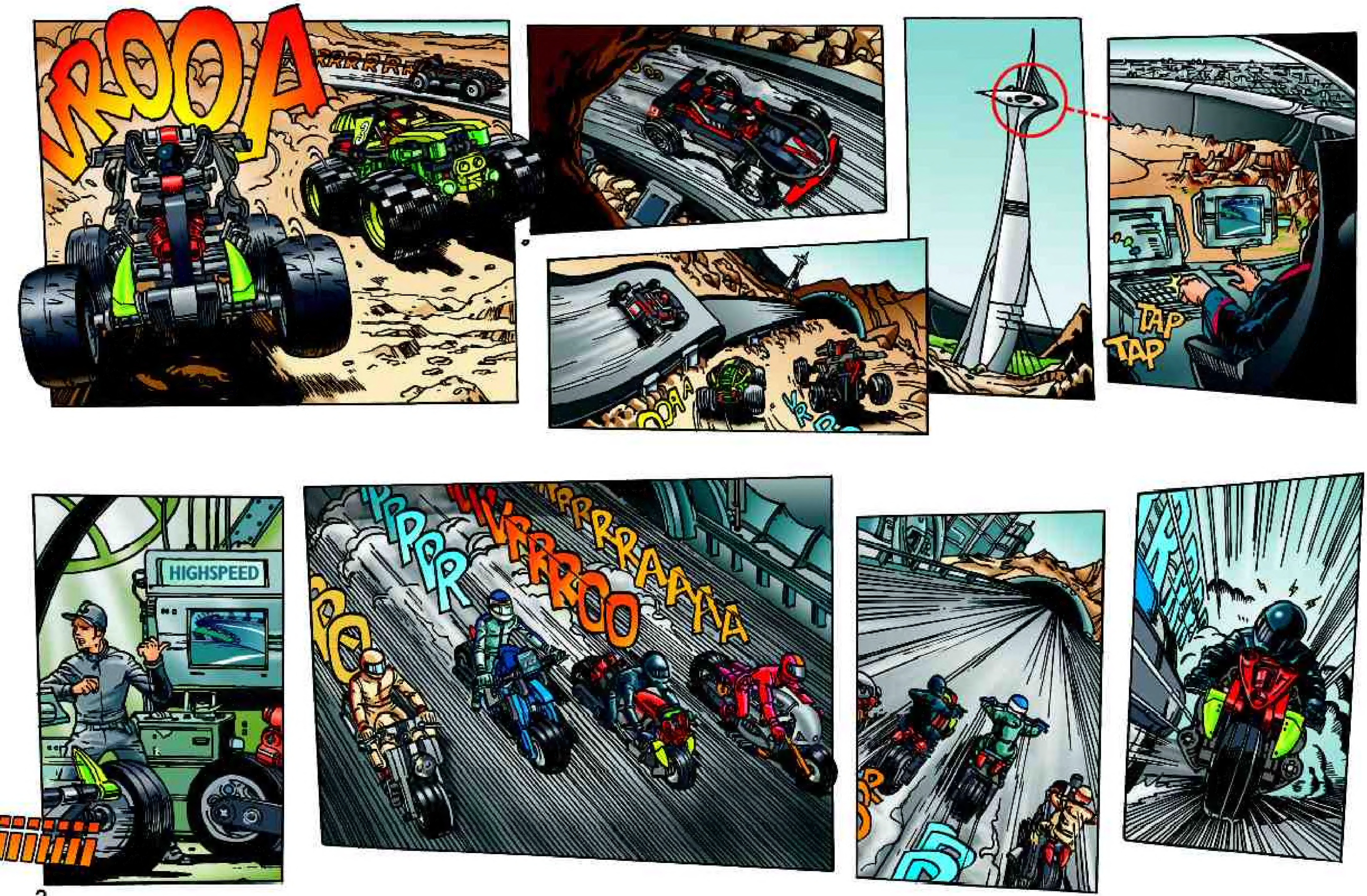
ROOA
TAP
TAP
HIGHSPEED

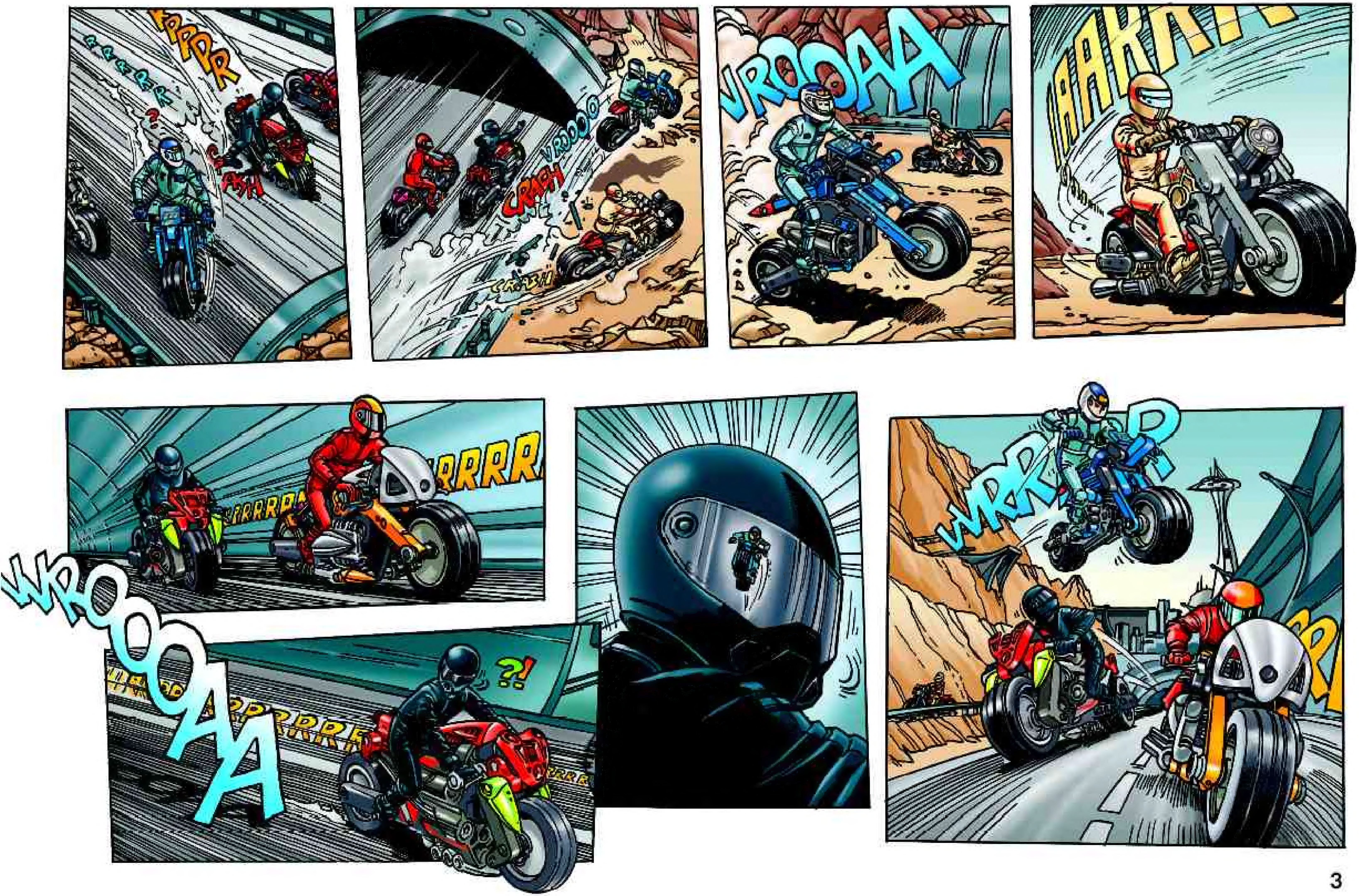
VROOOO
CRASH
VROOAA
VROOOAA
?!

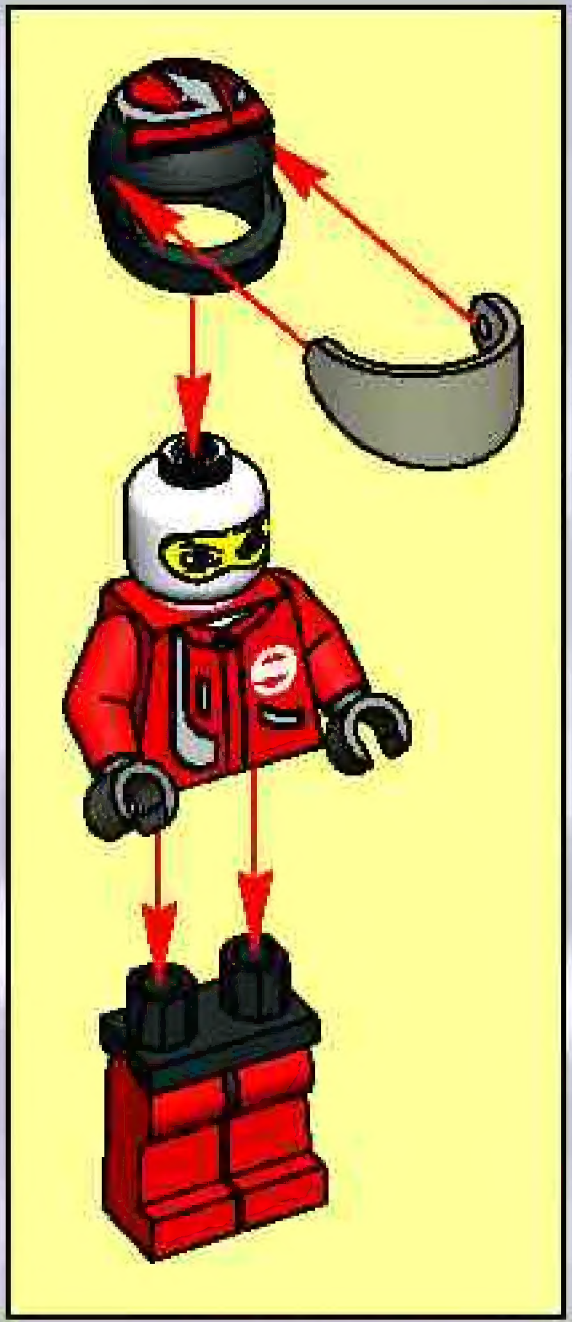

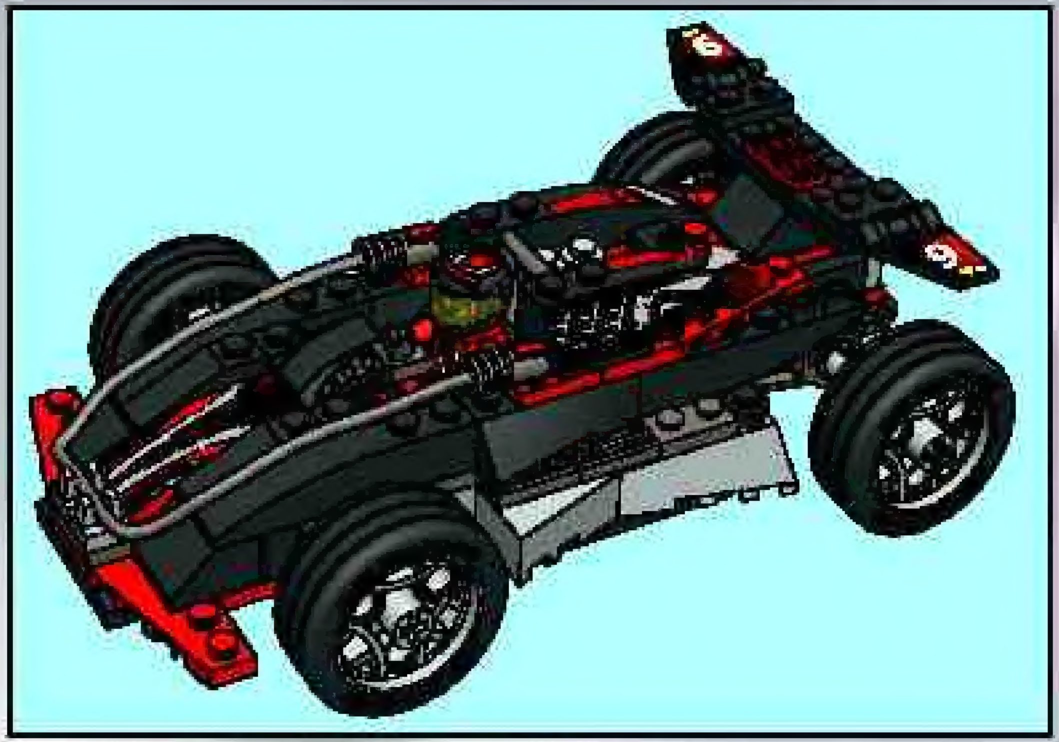

1

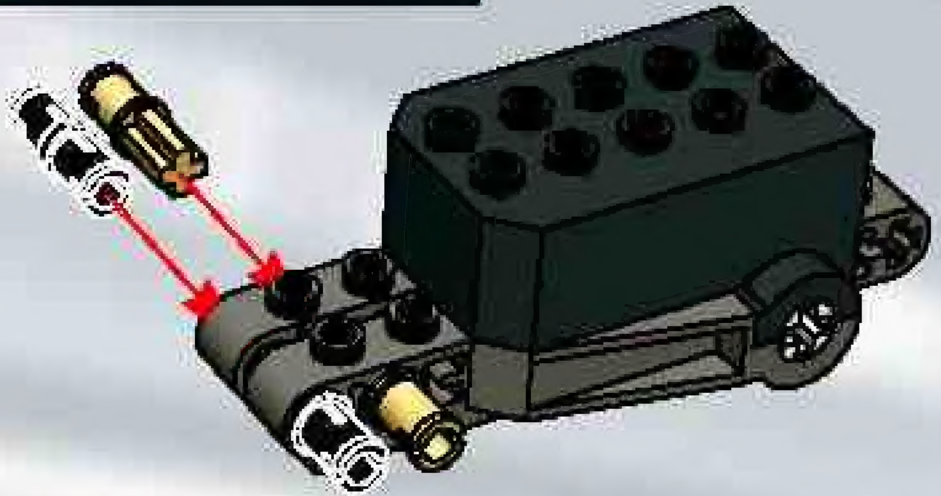

2

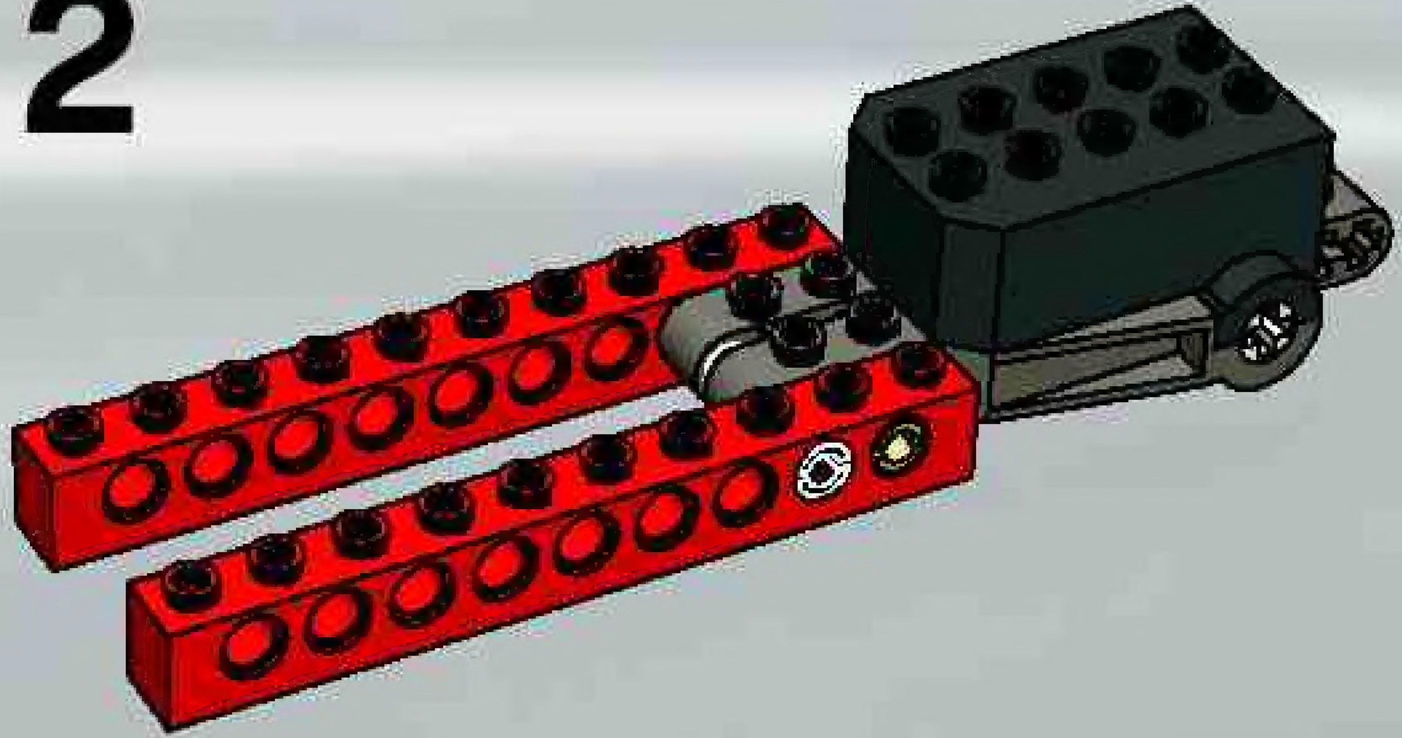

3

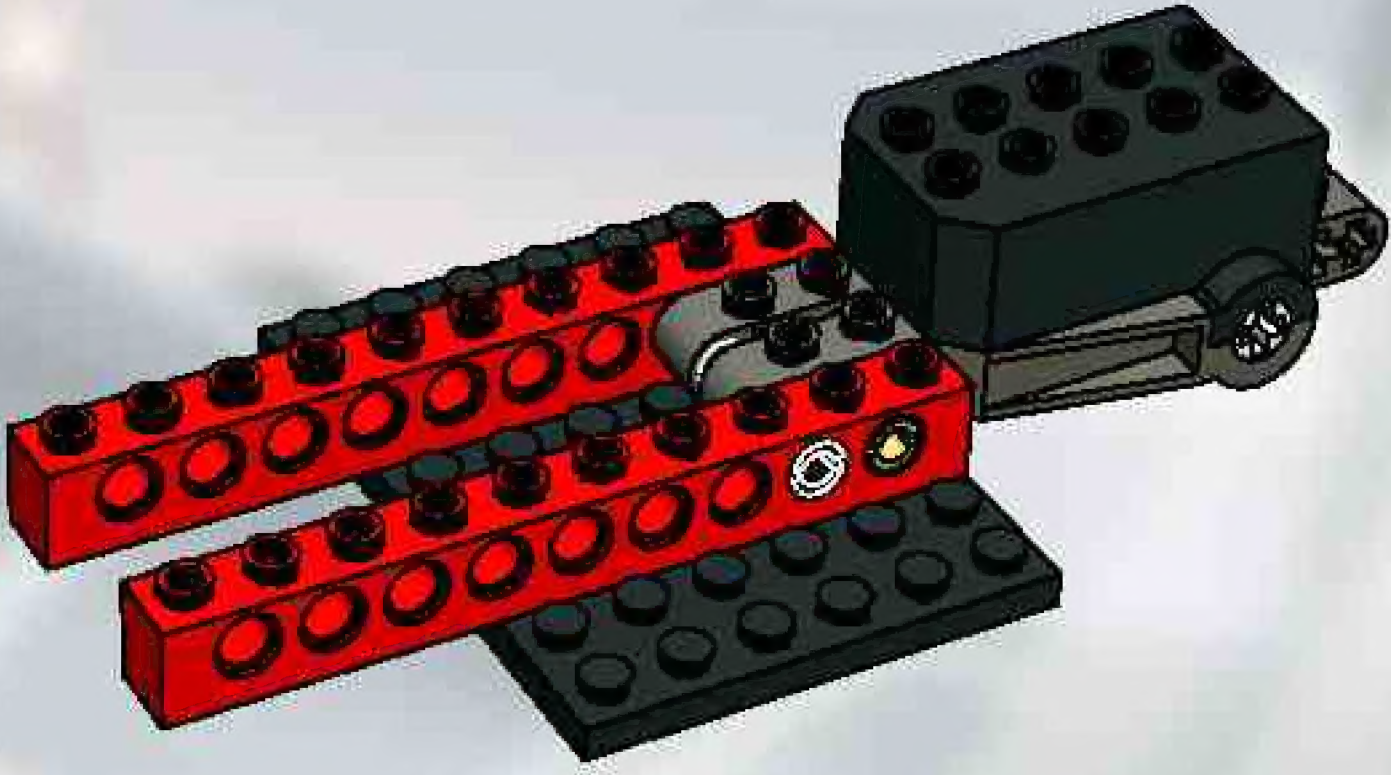

4

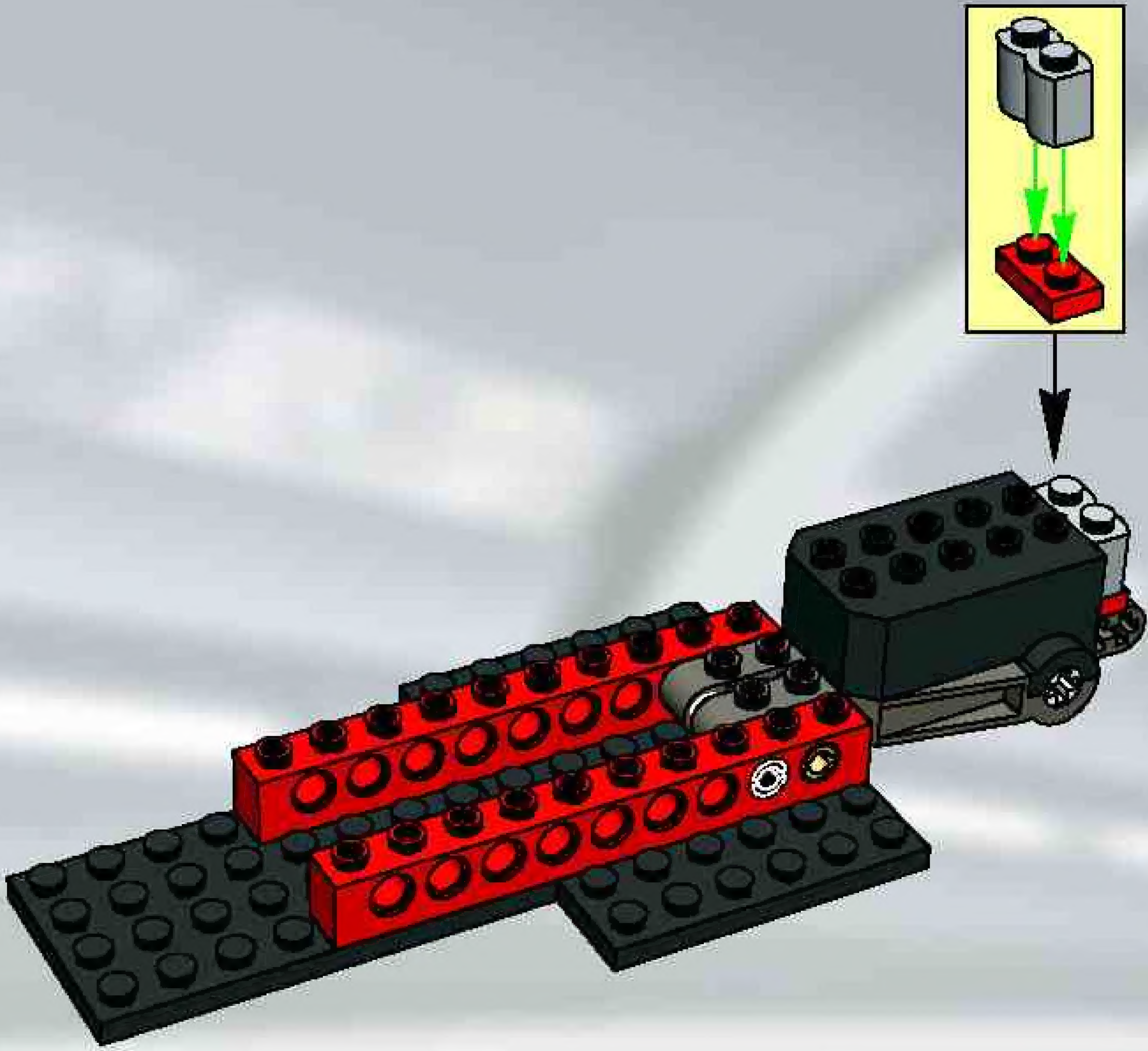

5

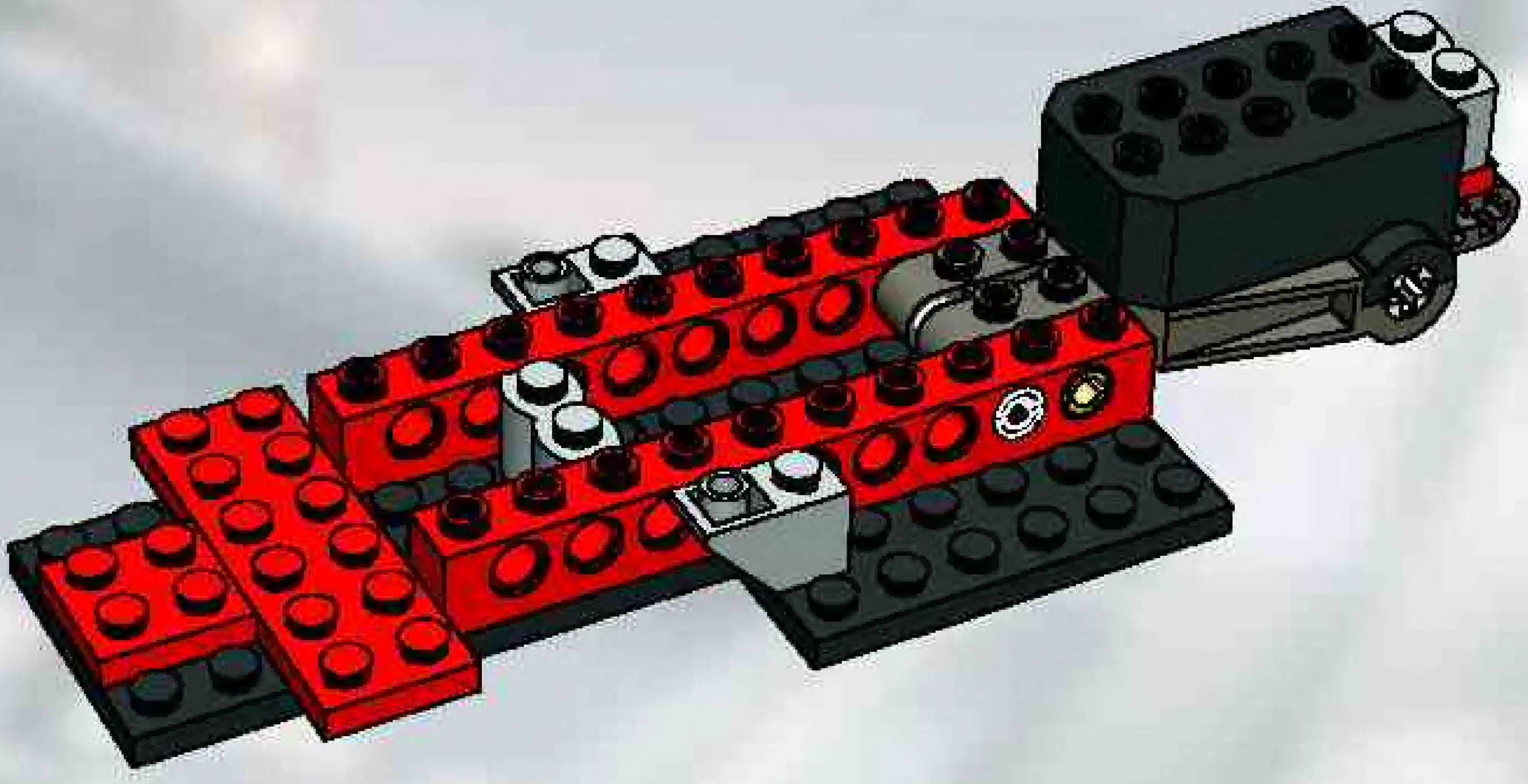

6

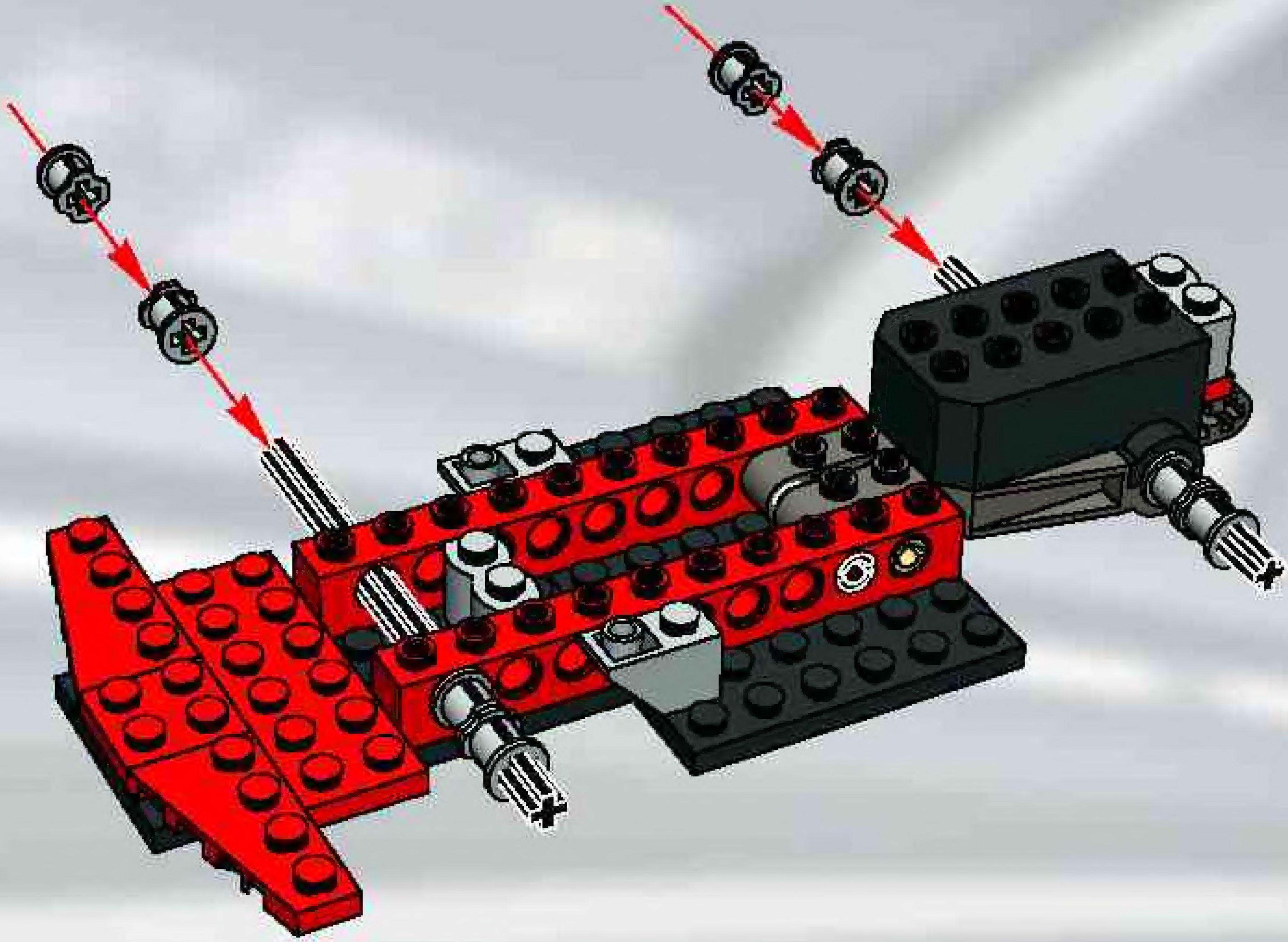

7

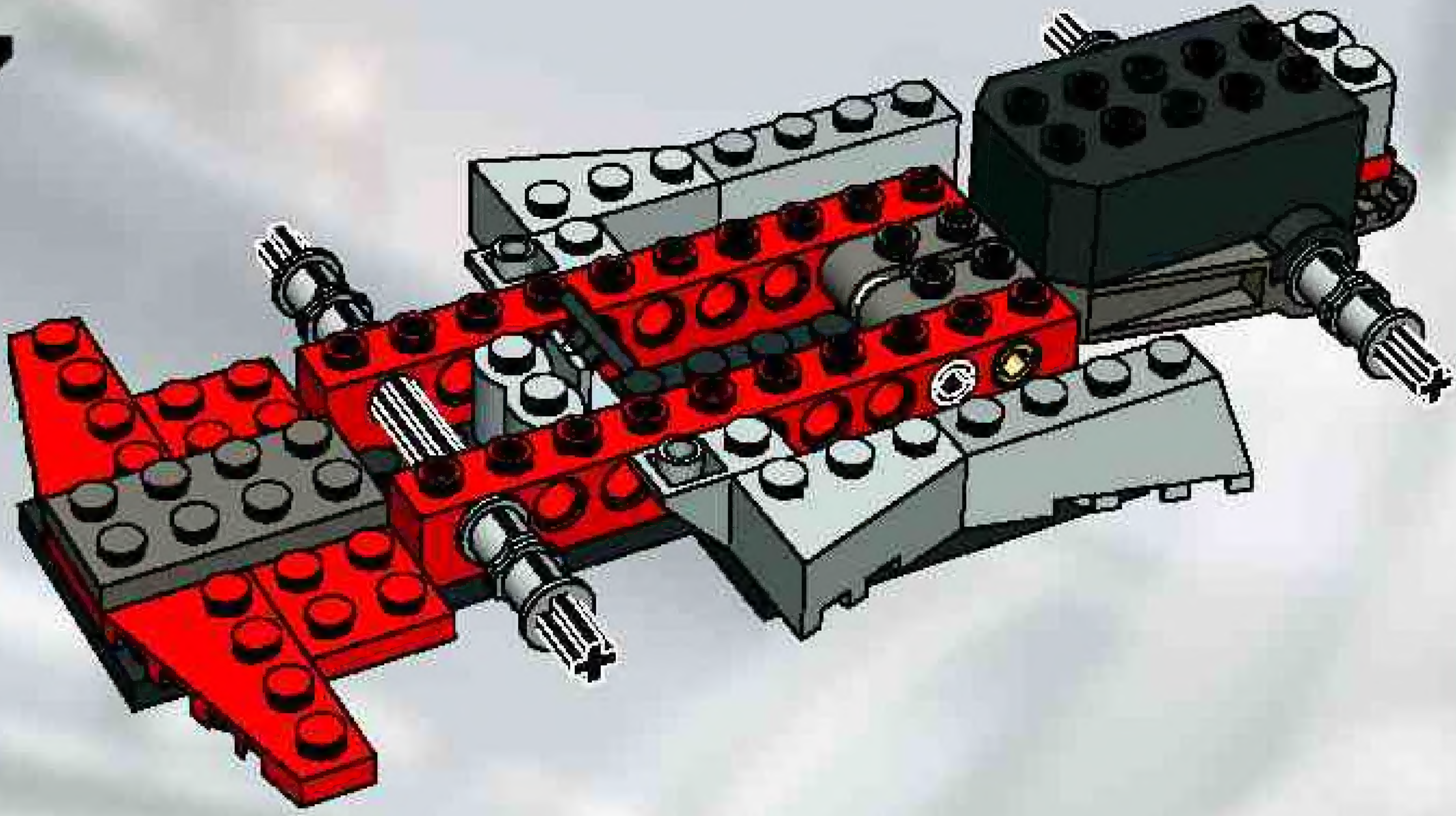

8

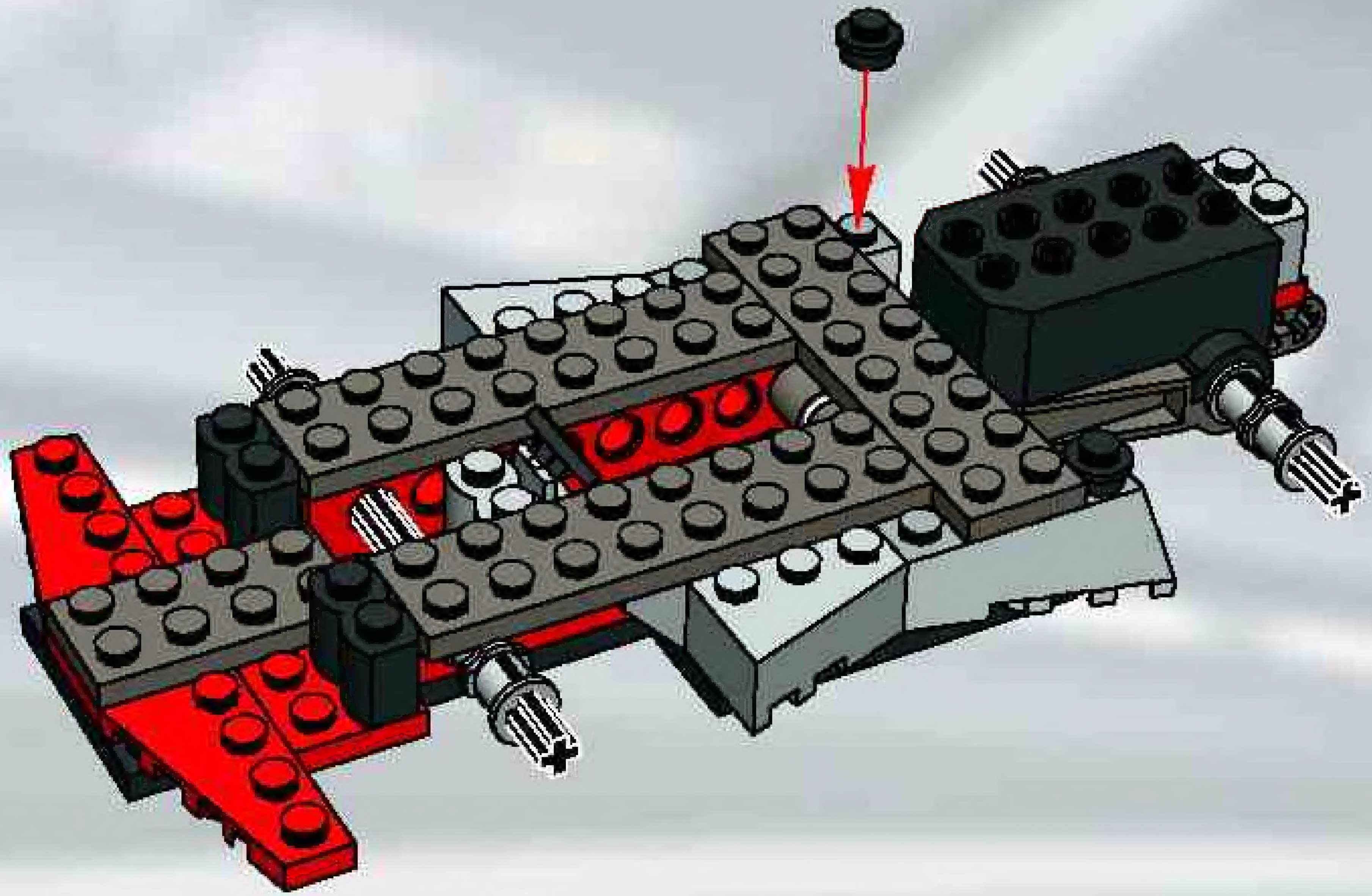

9

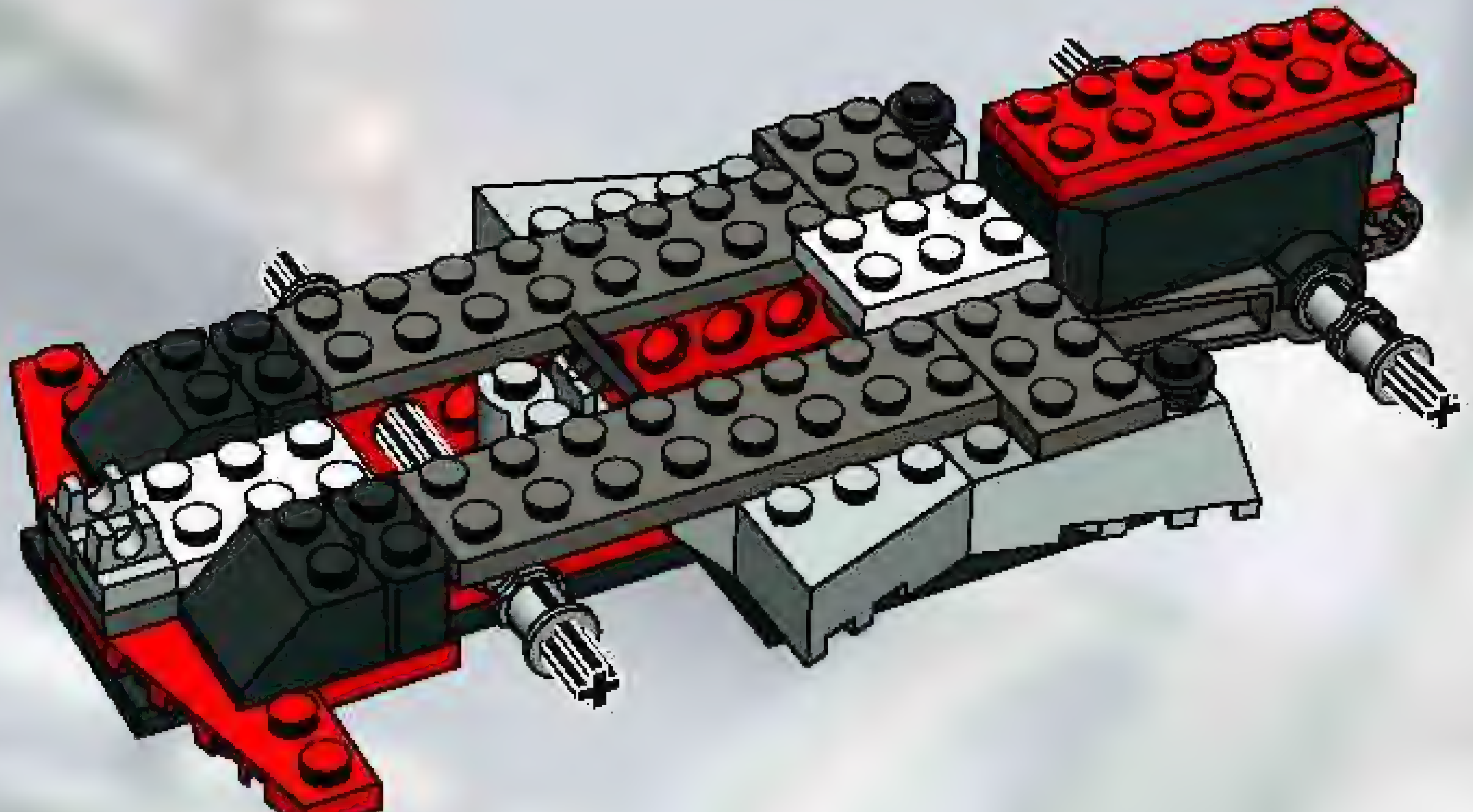

10

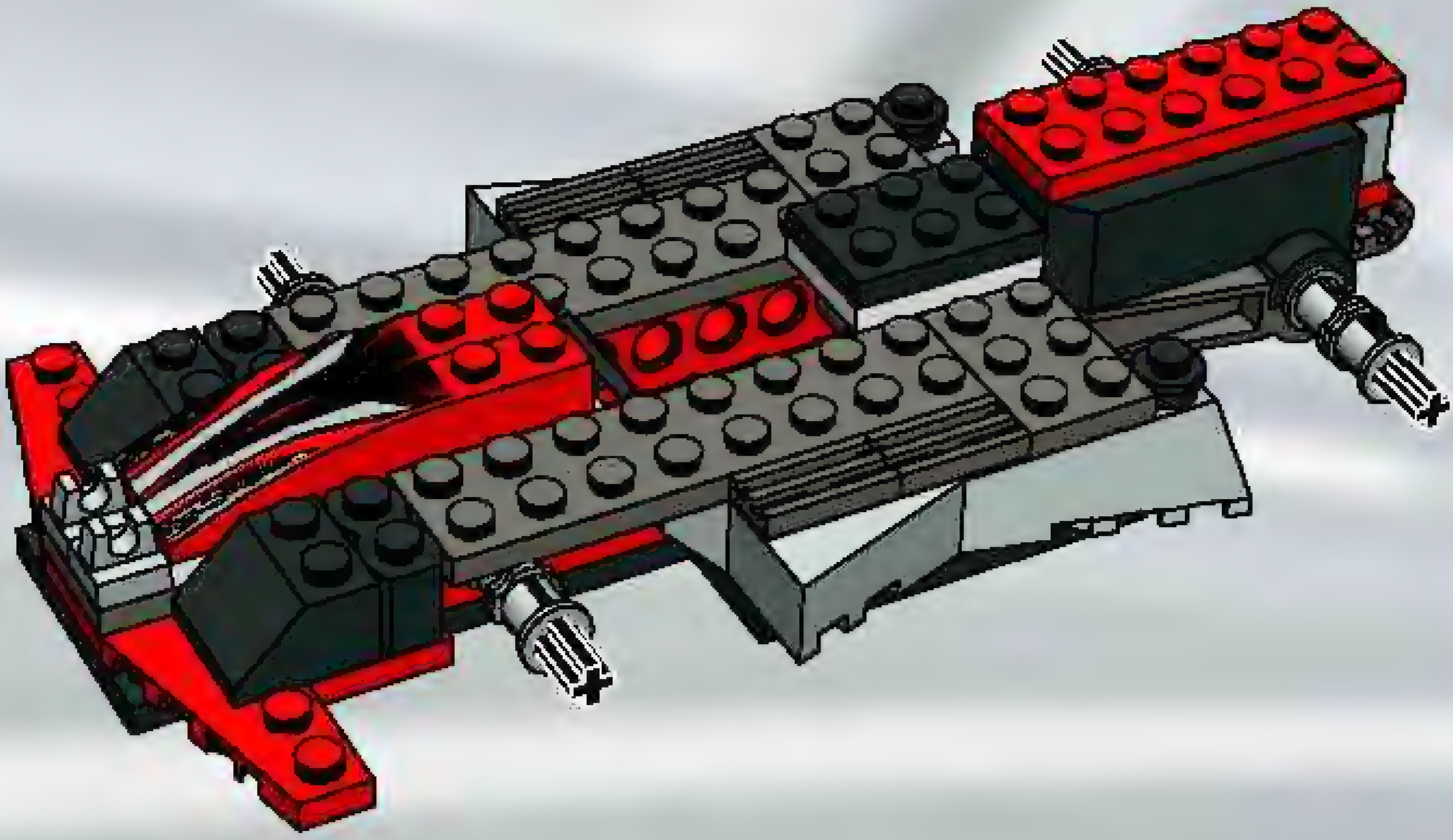

11

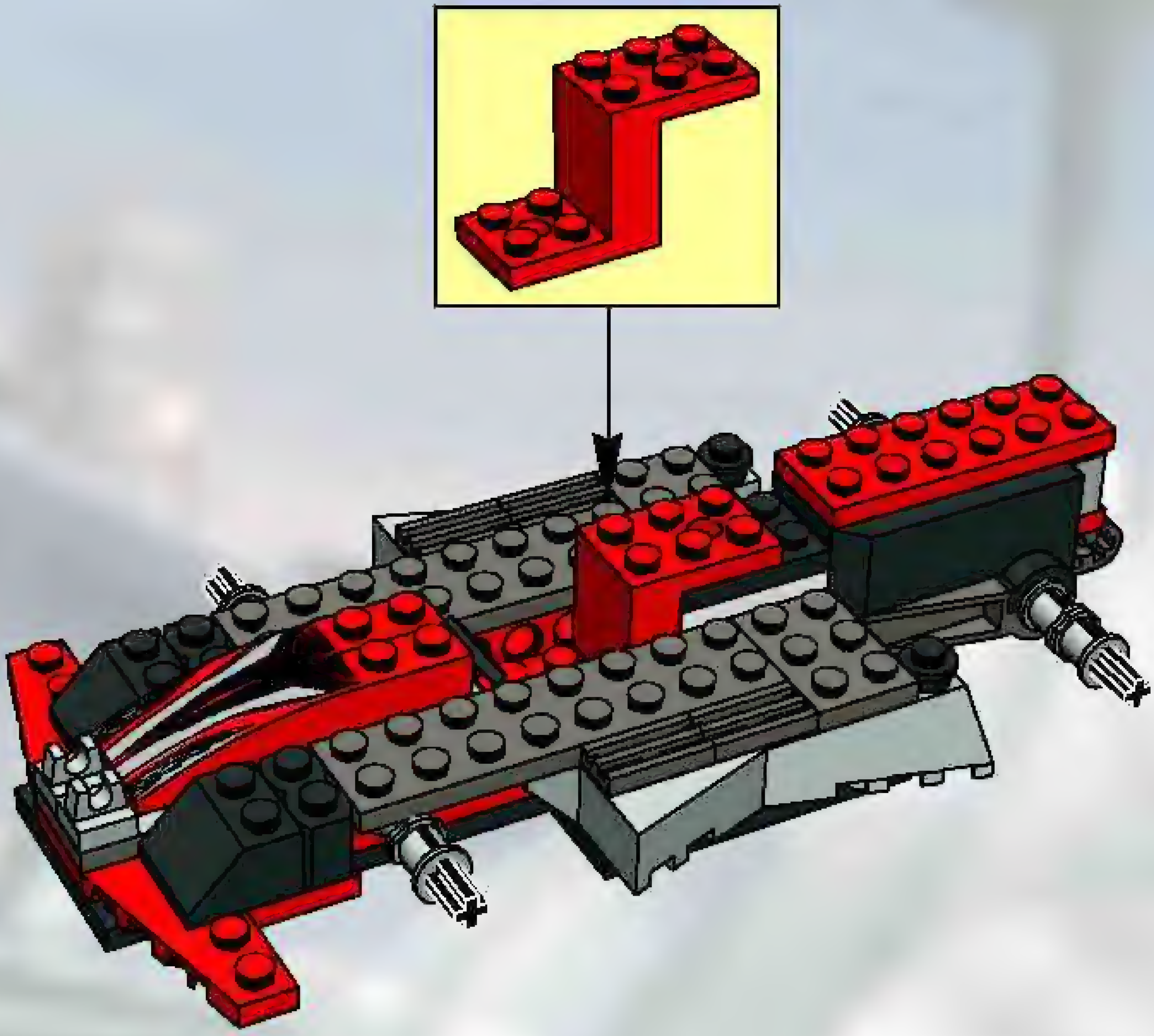

12

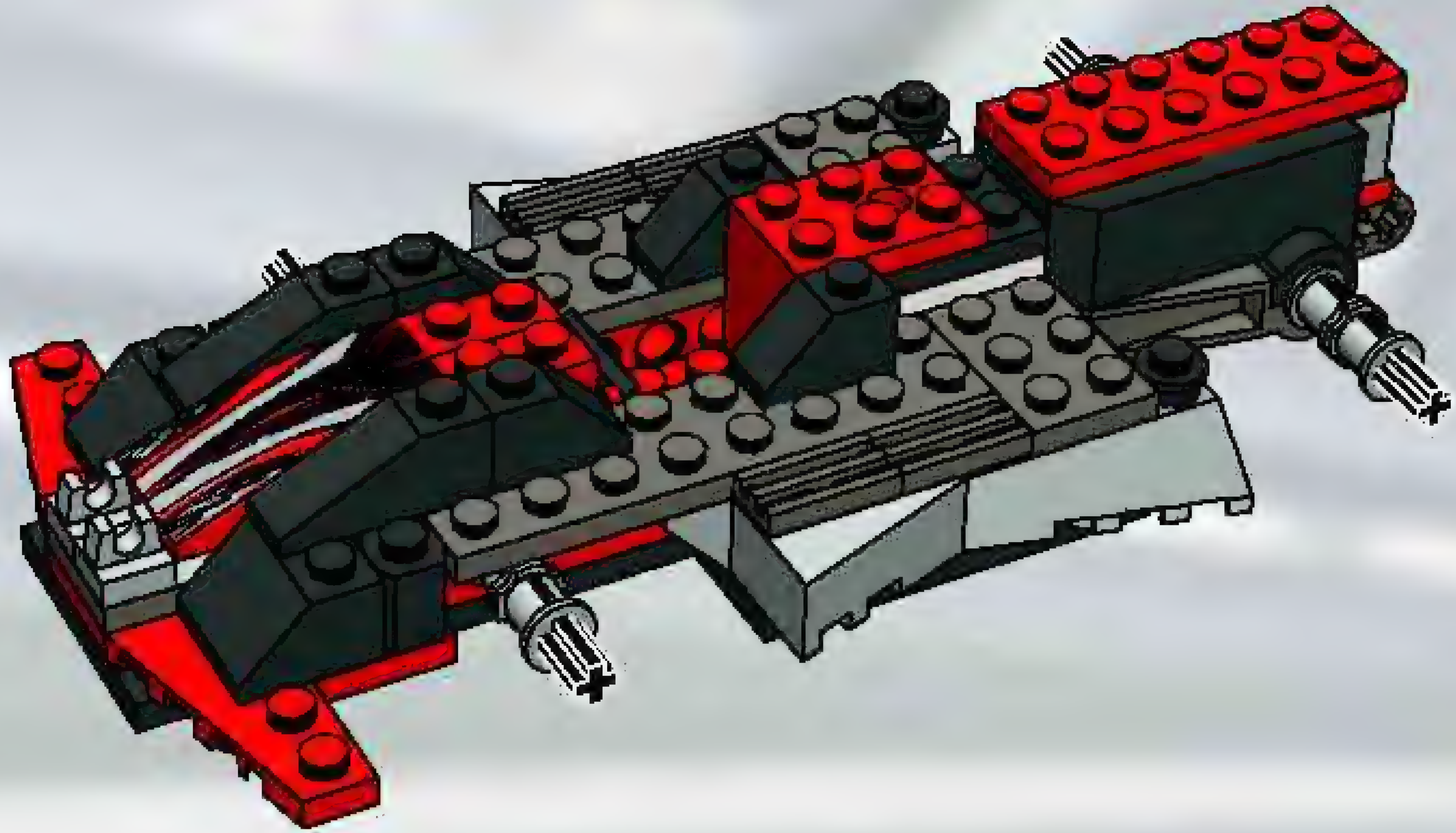

13

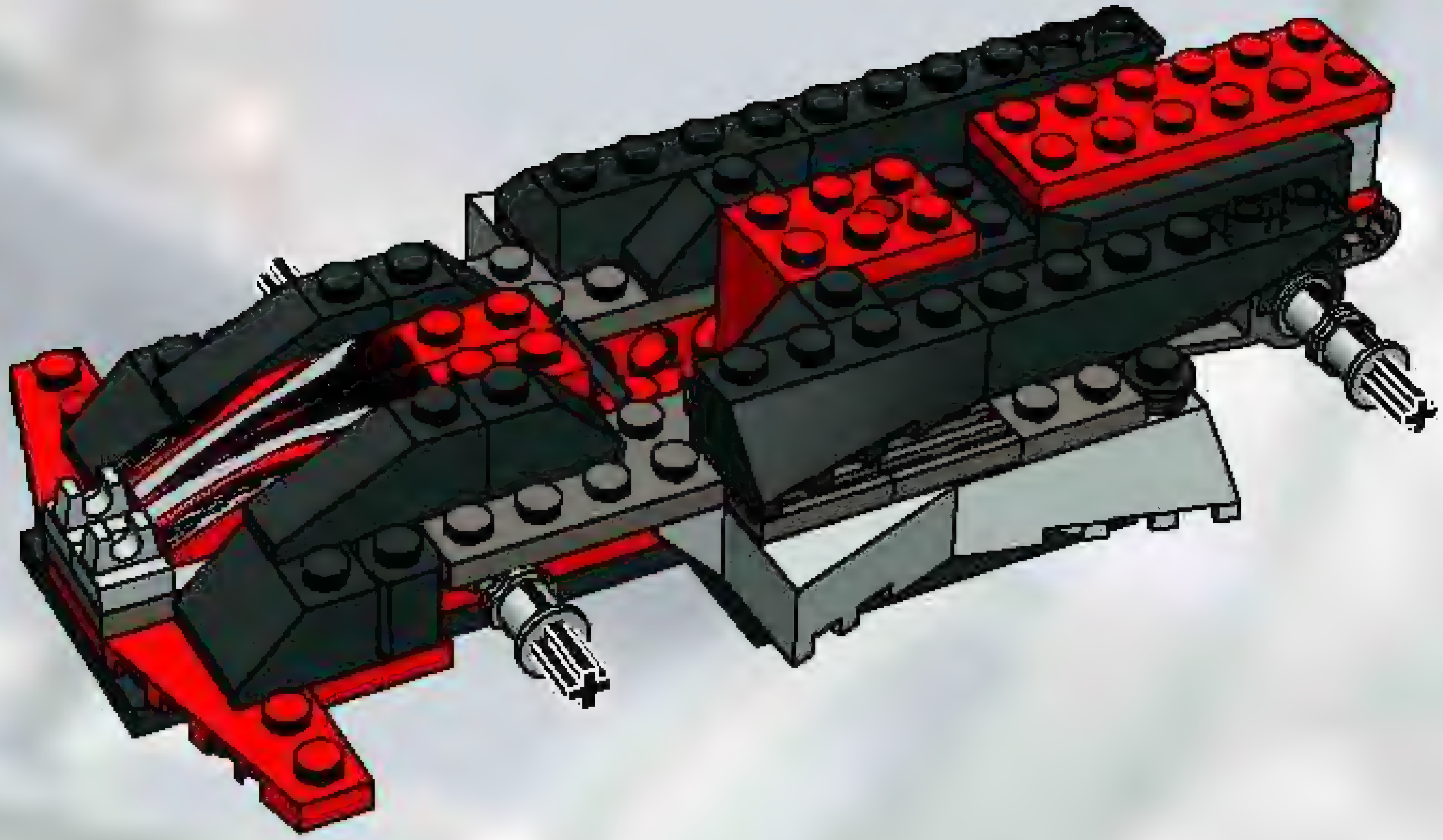

14

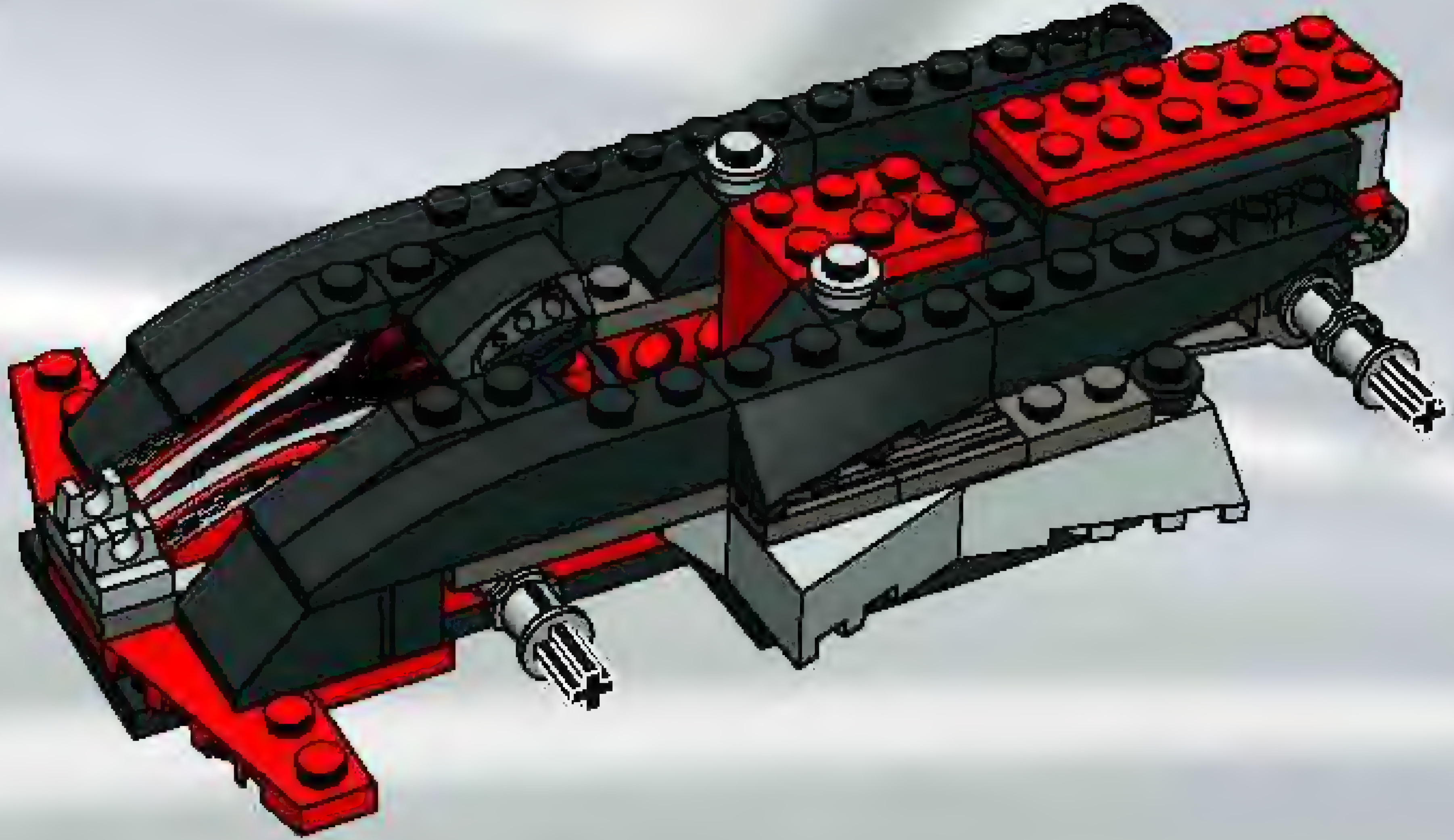

15

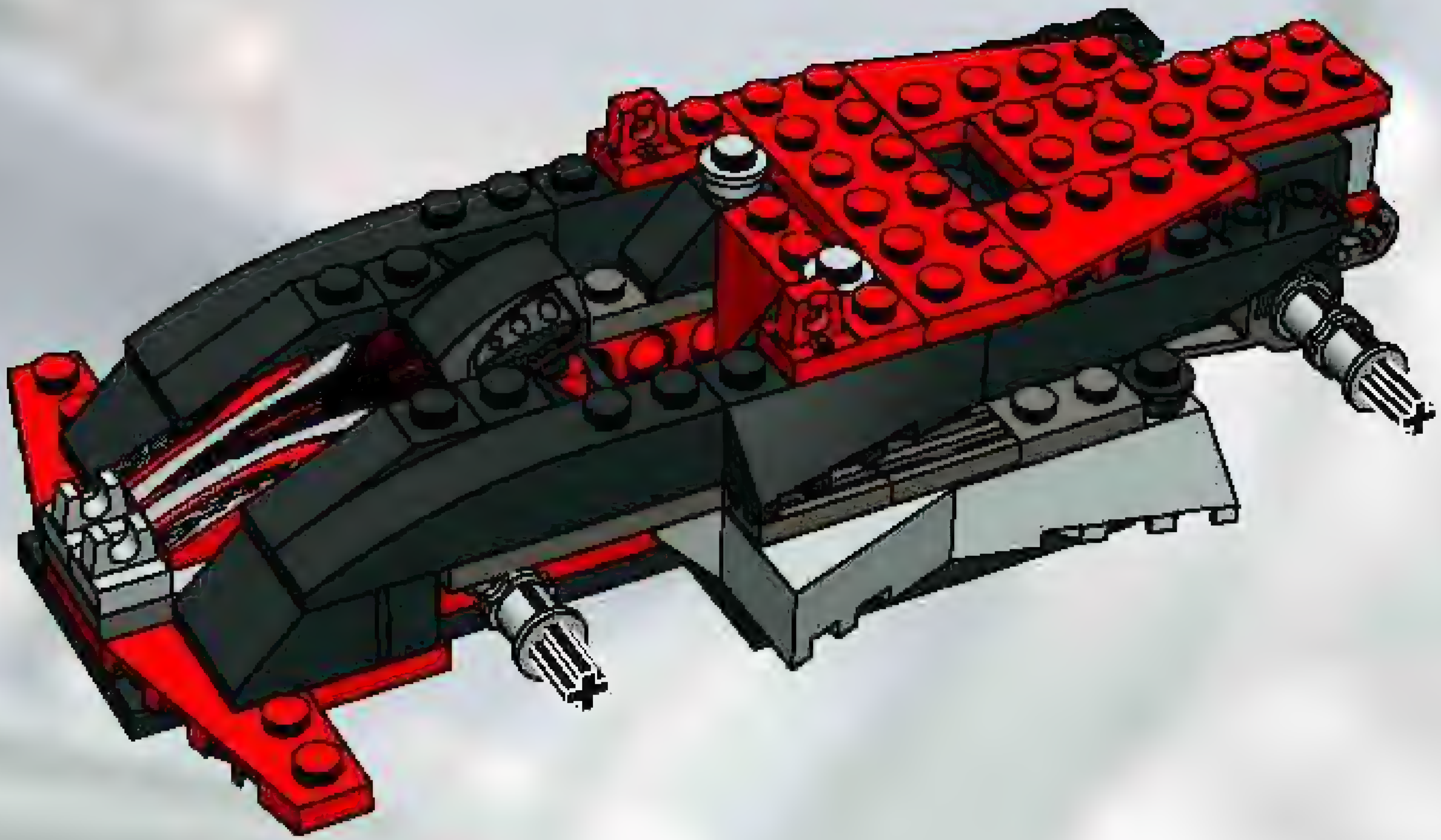

16

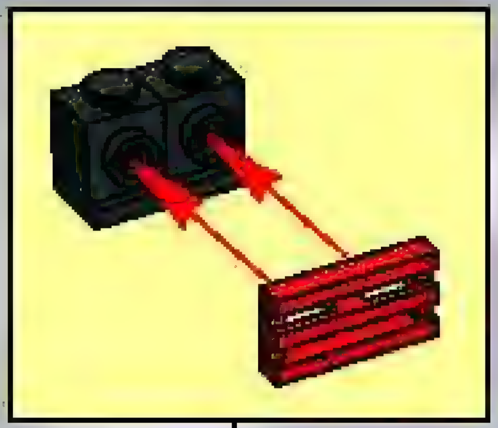

17

18

19

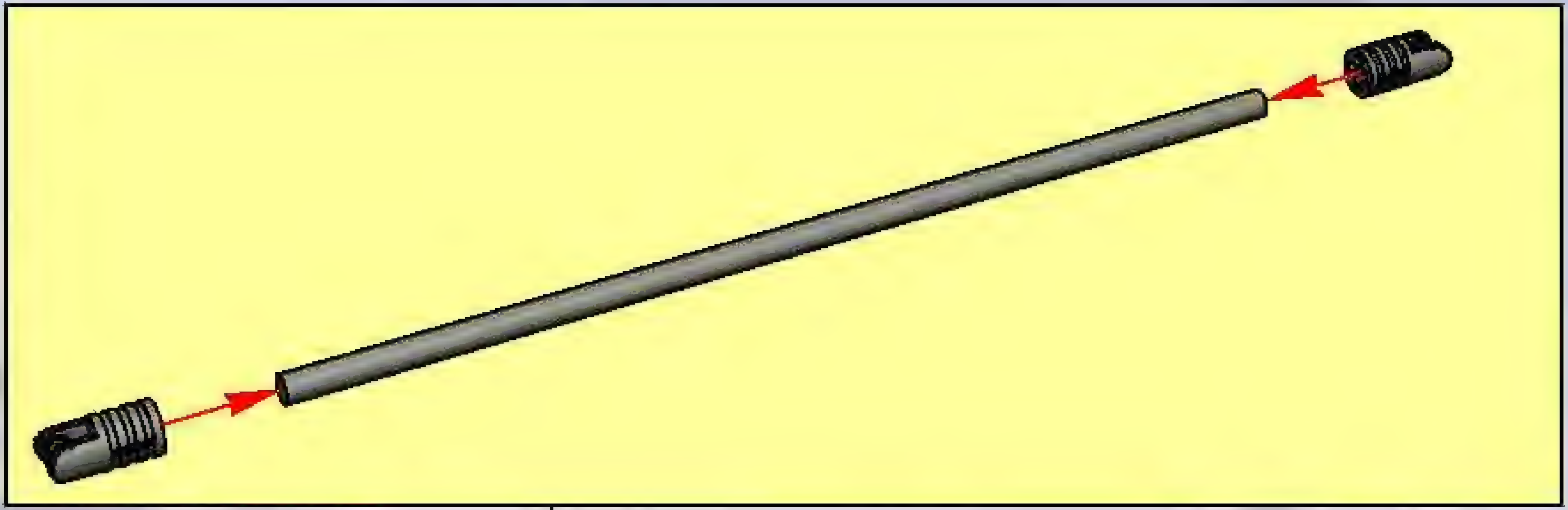

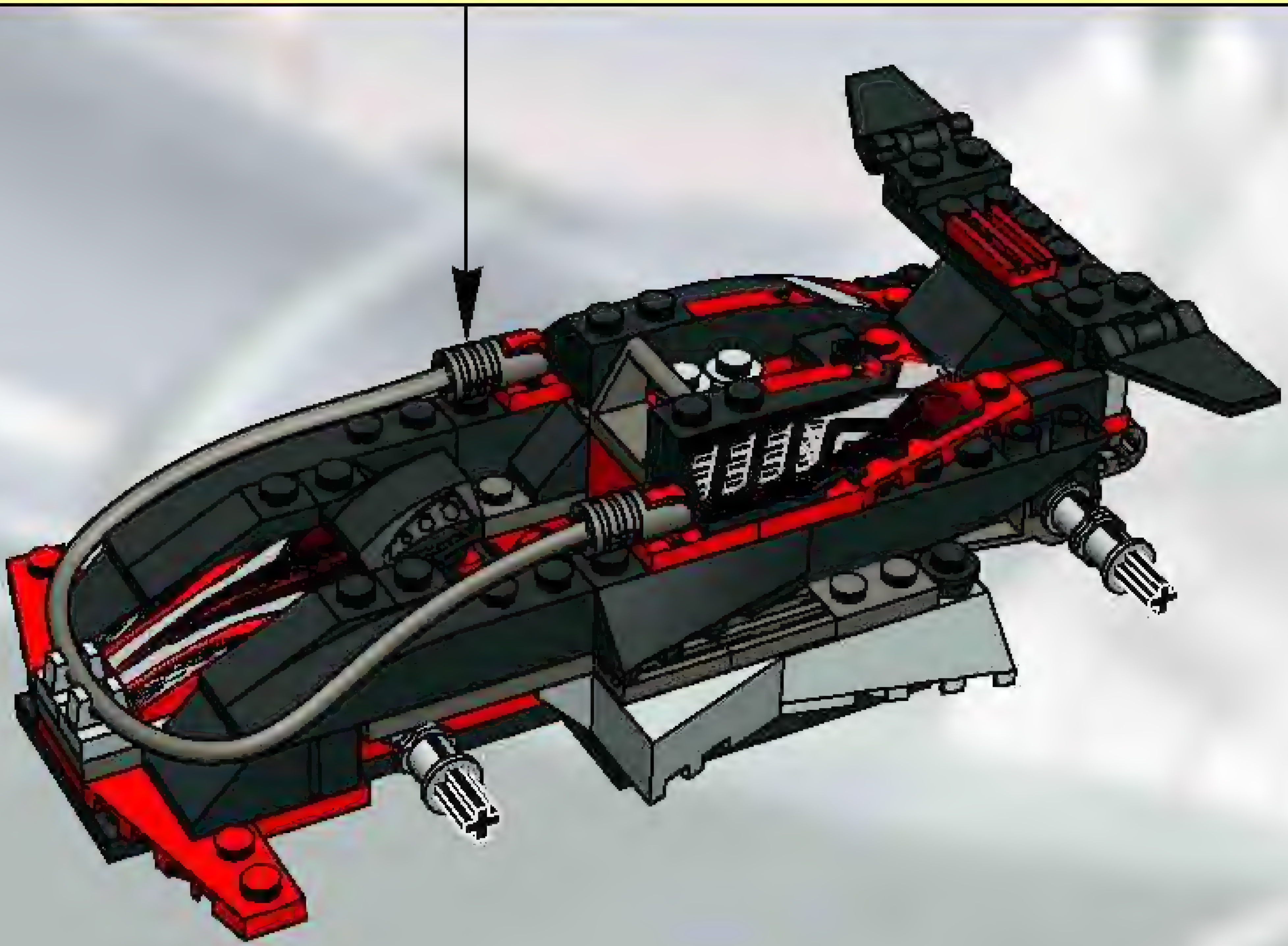

20

7
pull-back motor

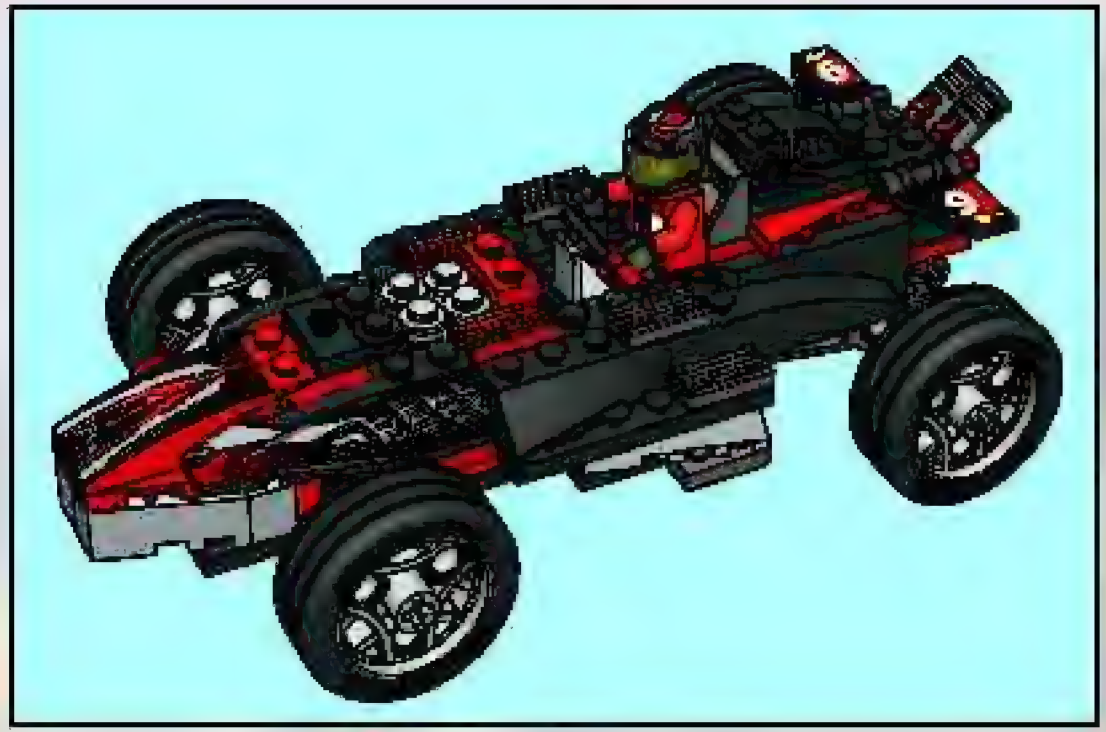

1

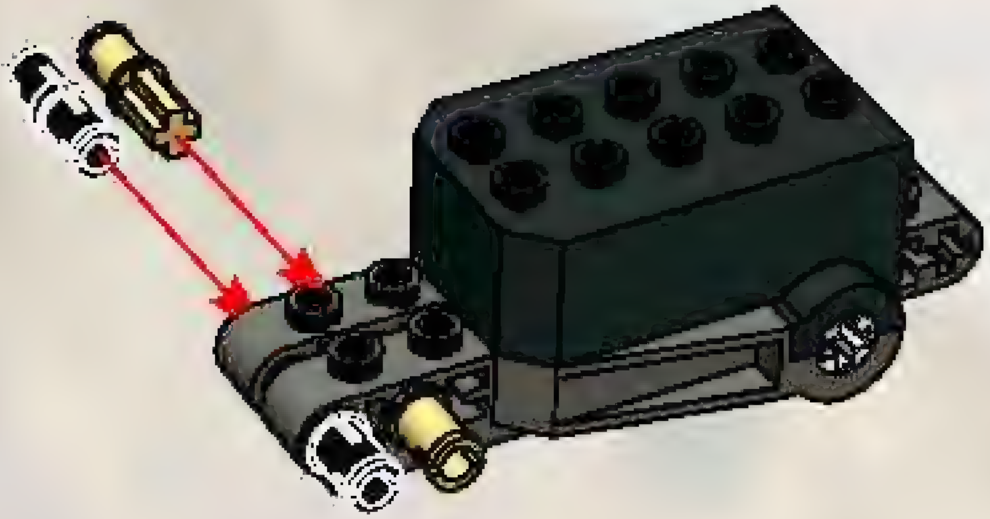

2

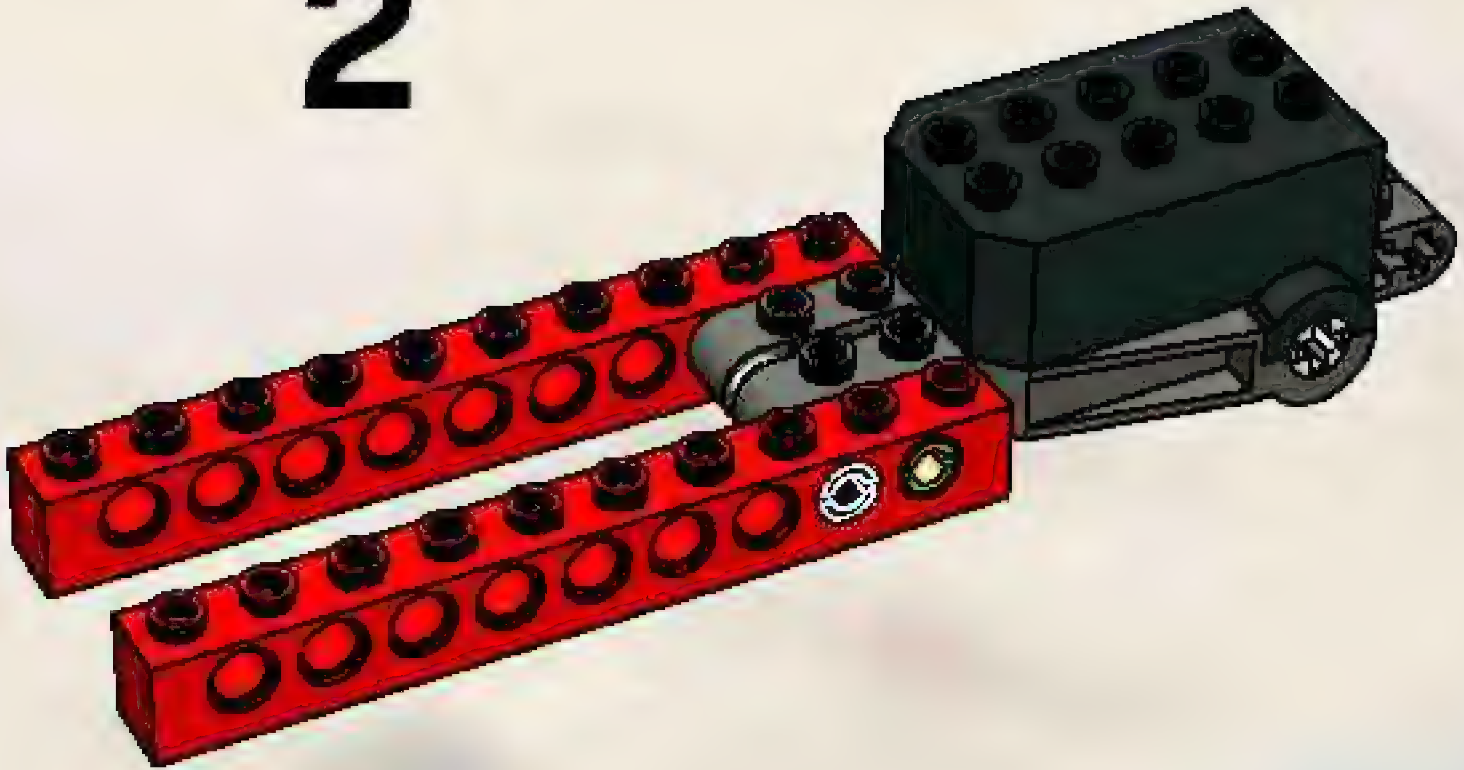

3

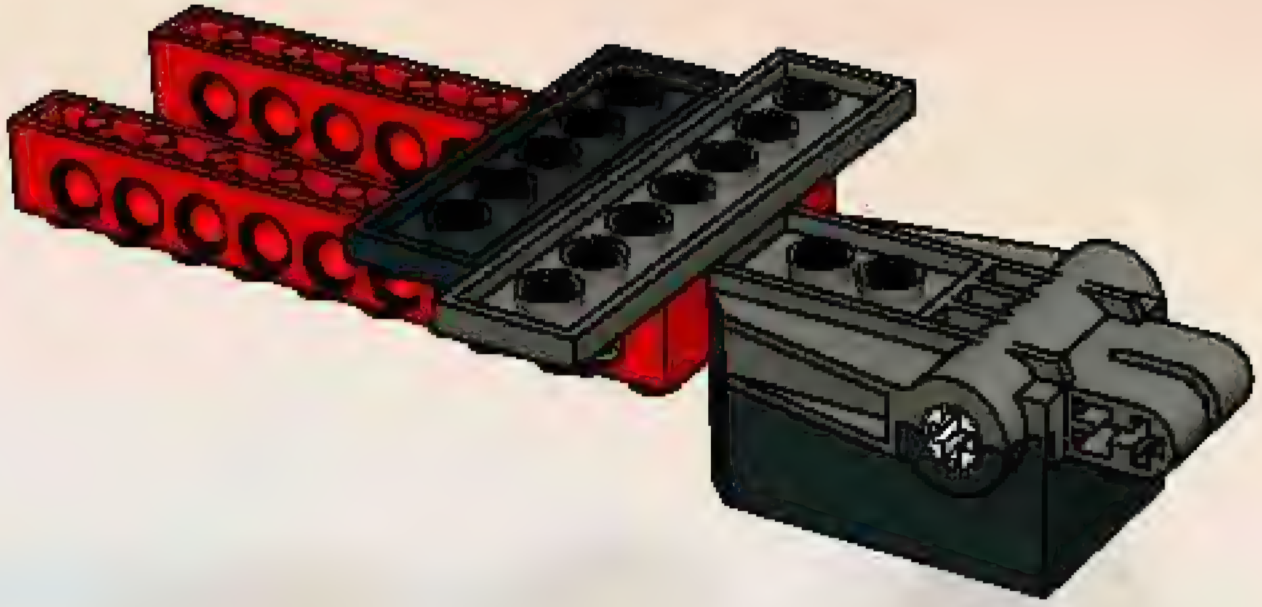

4

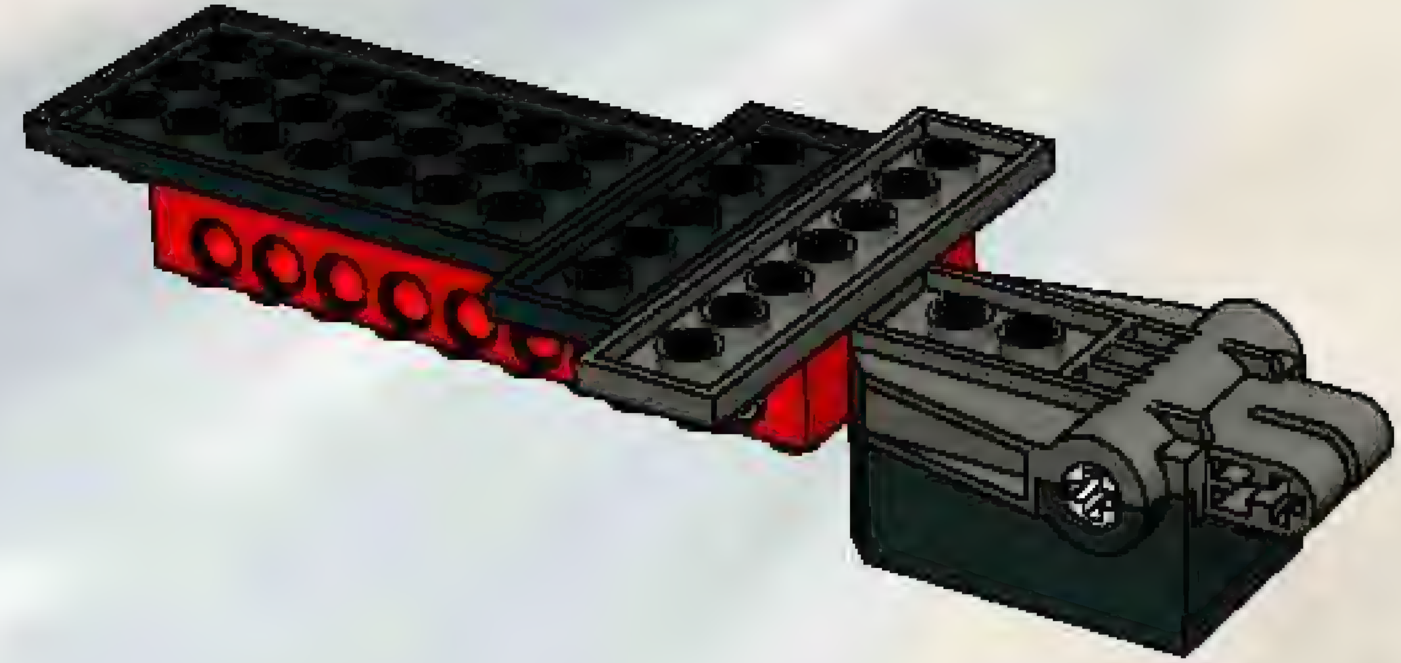

5

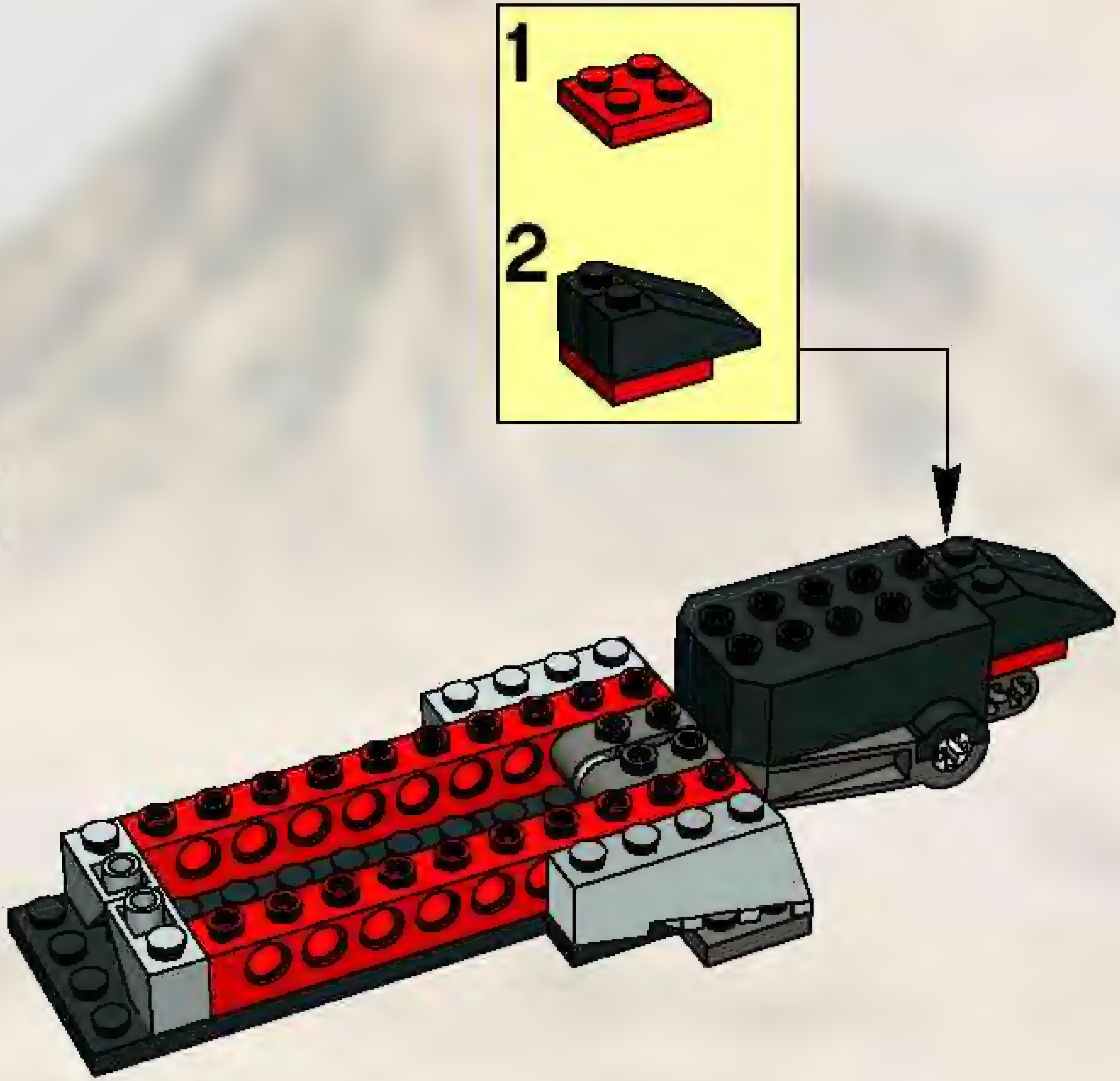

6

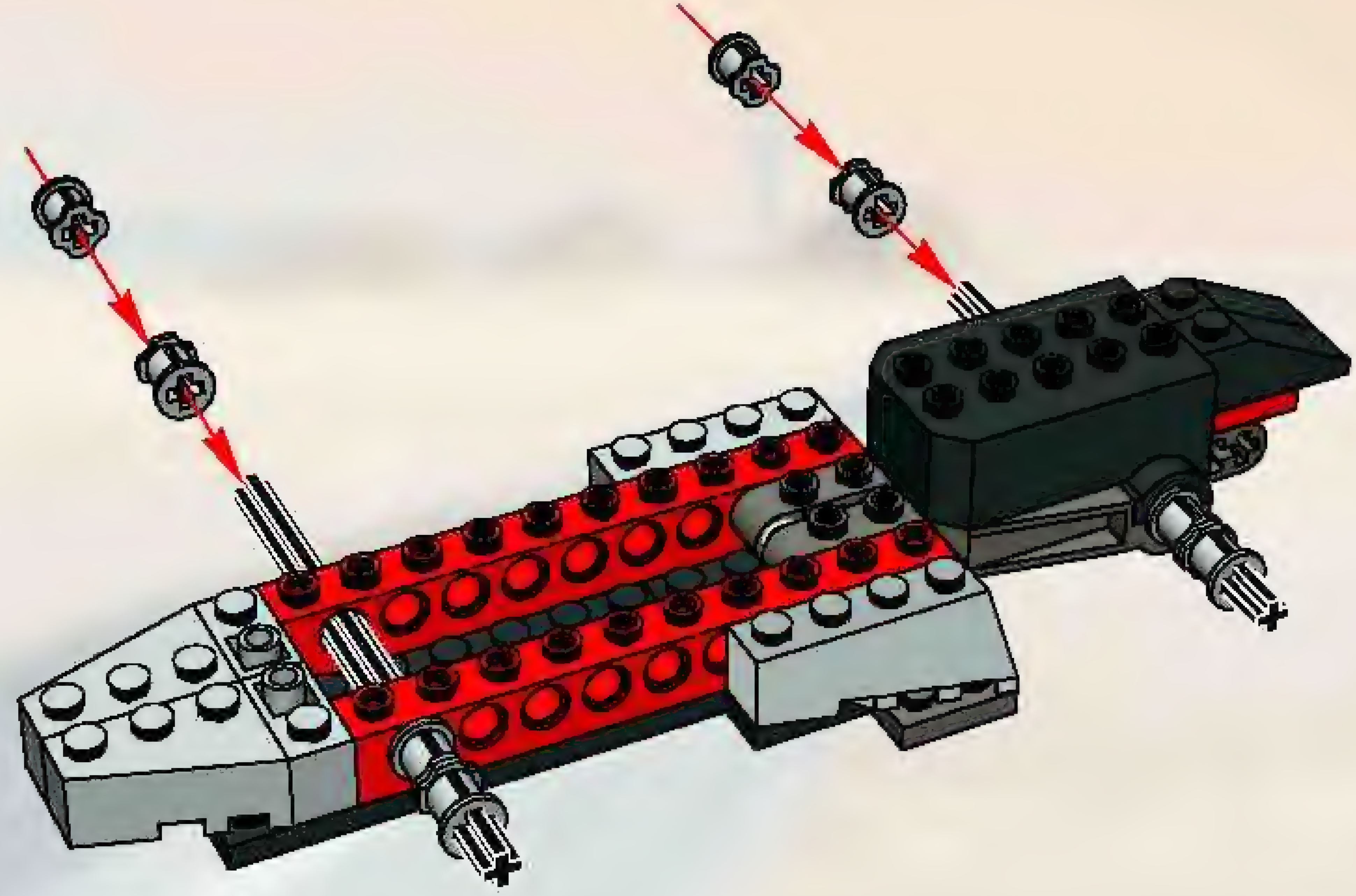

7

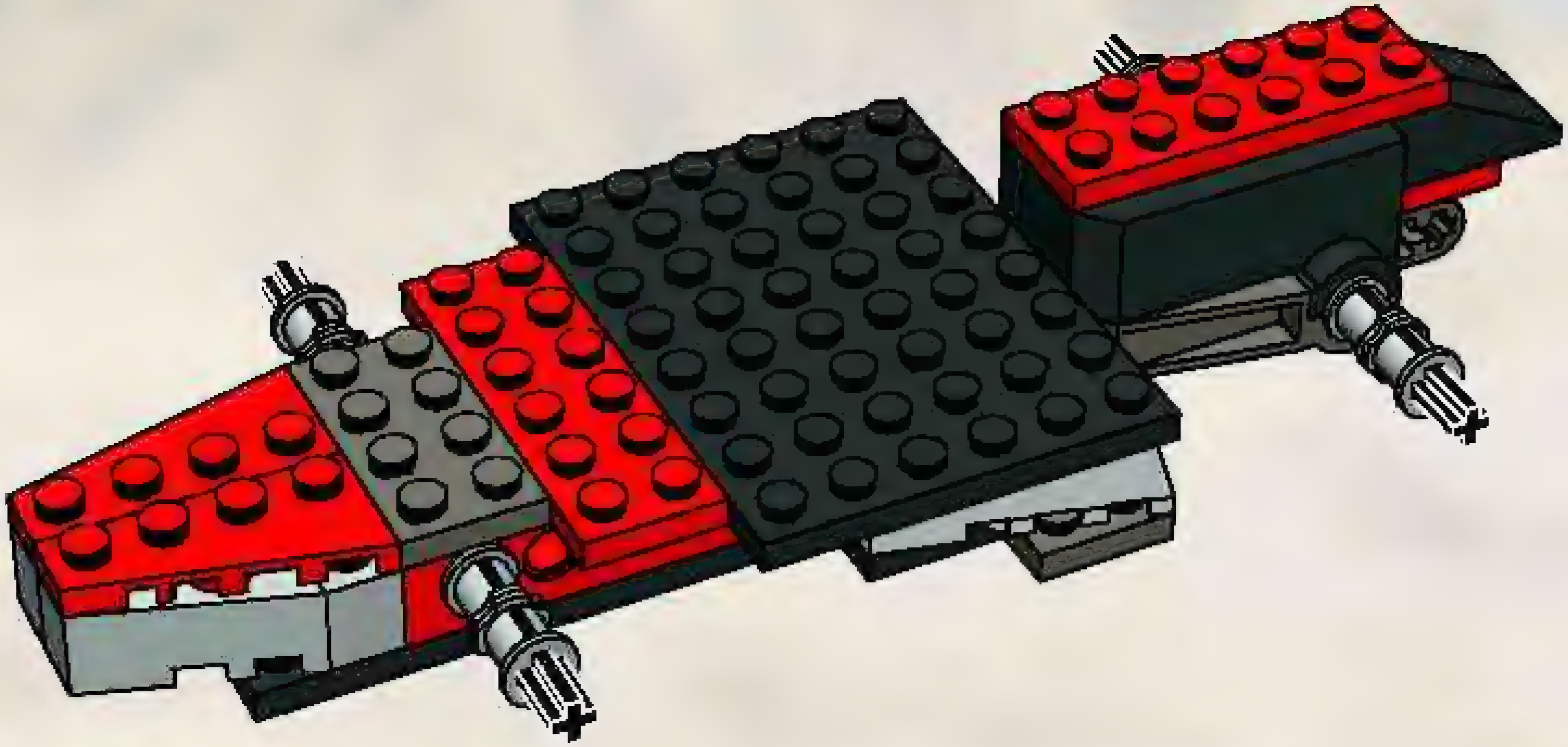

8

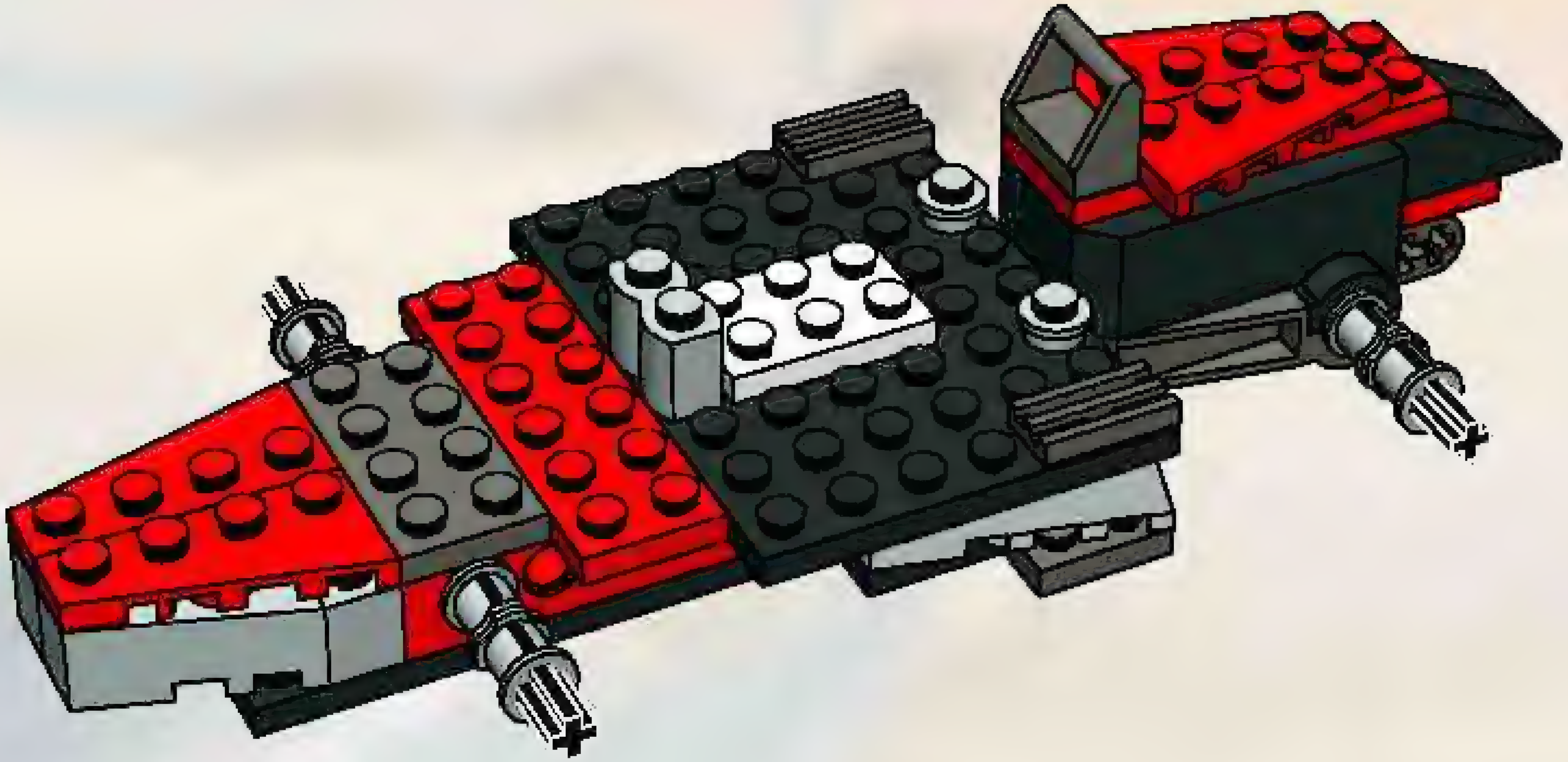

9

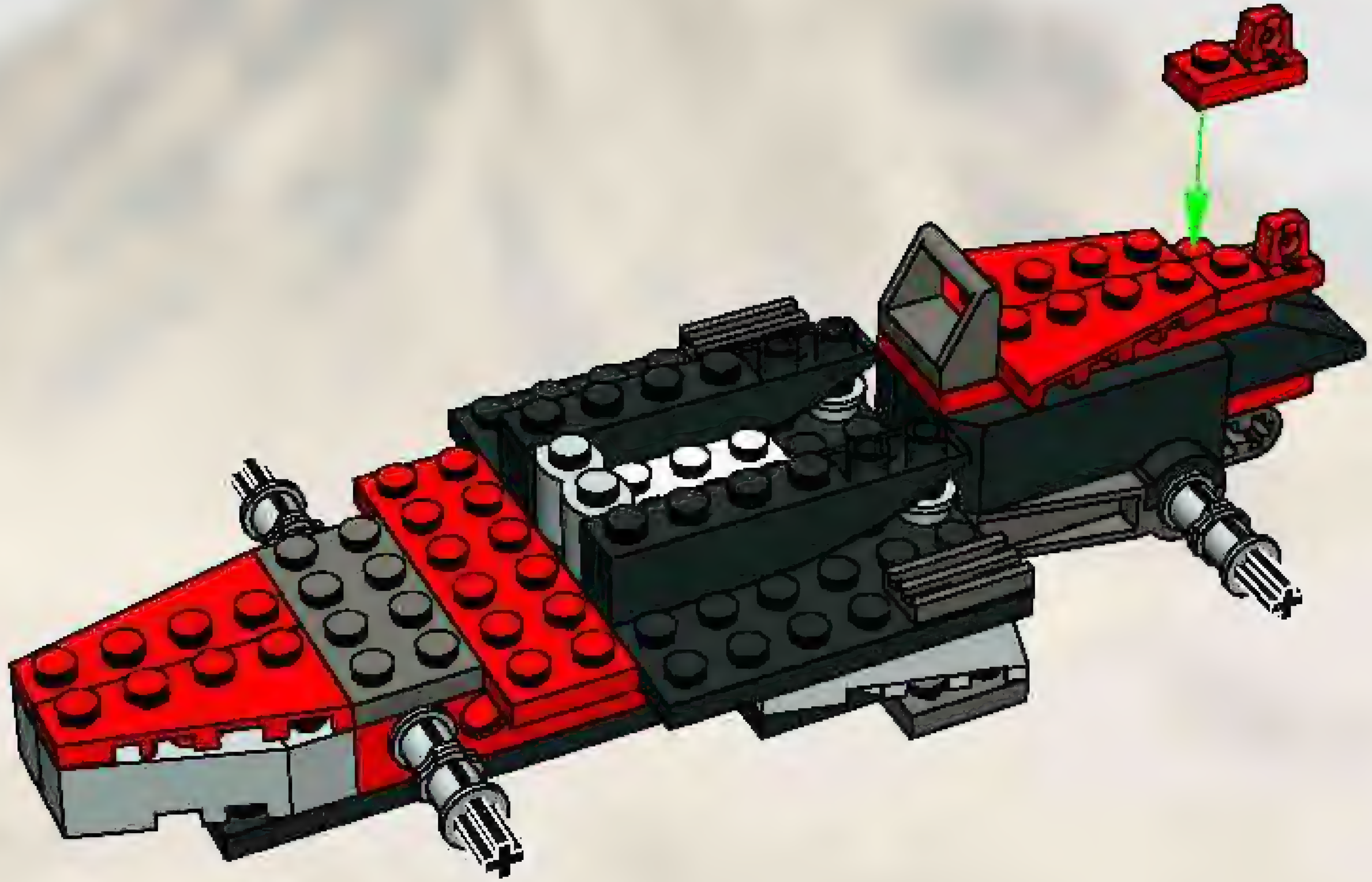

10

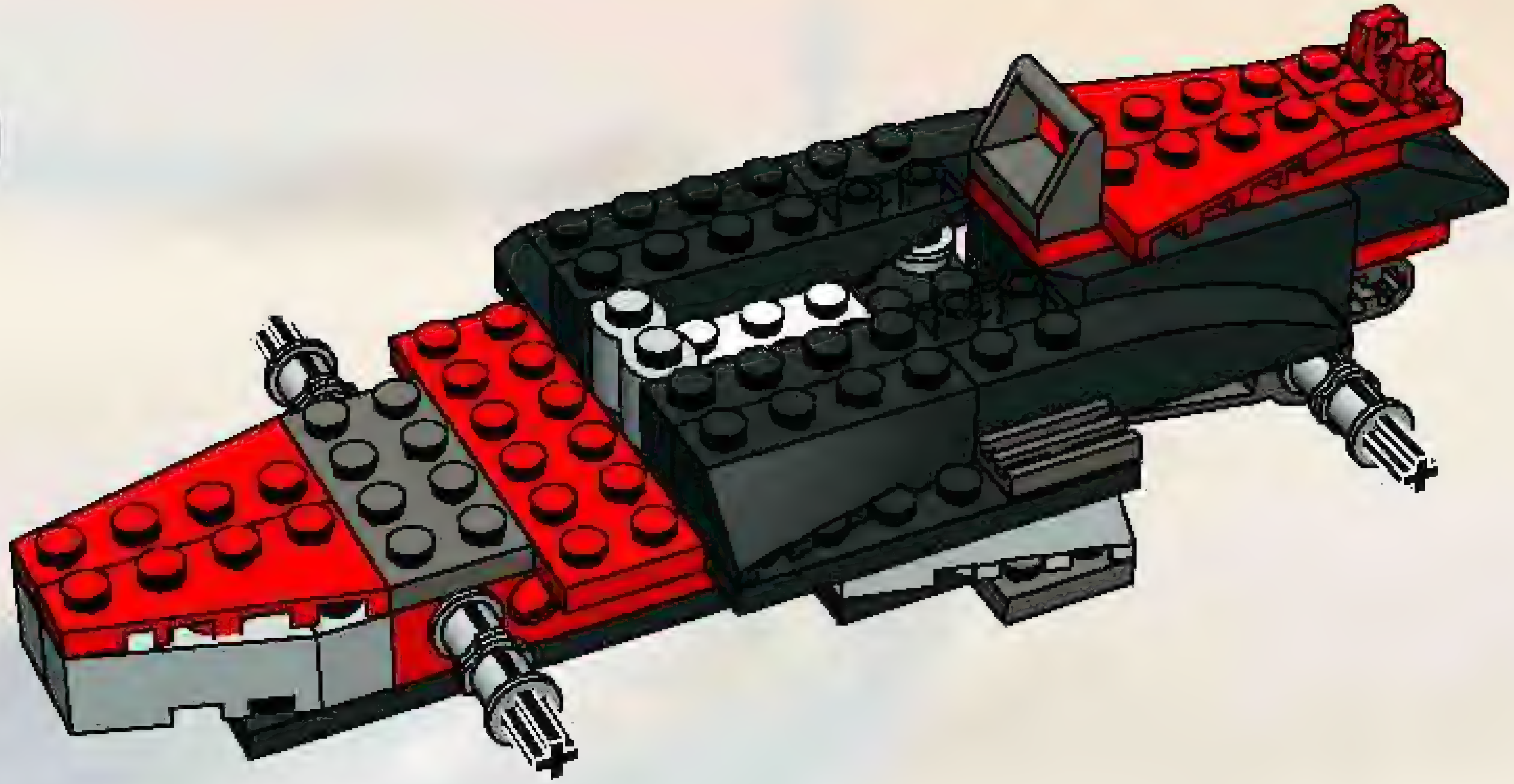

11

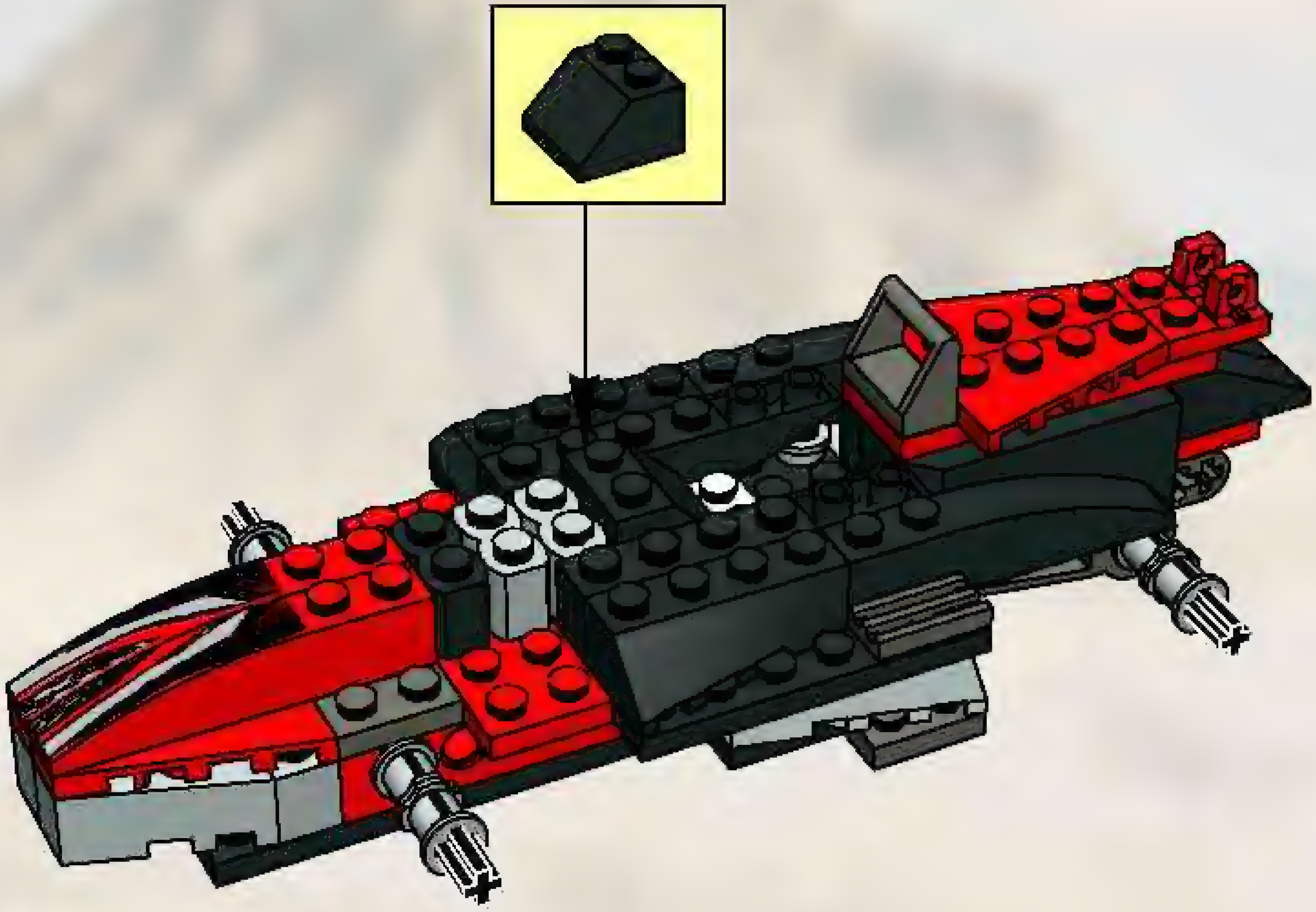

12

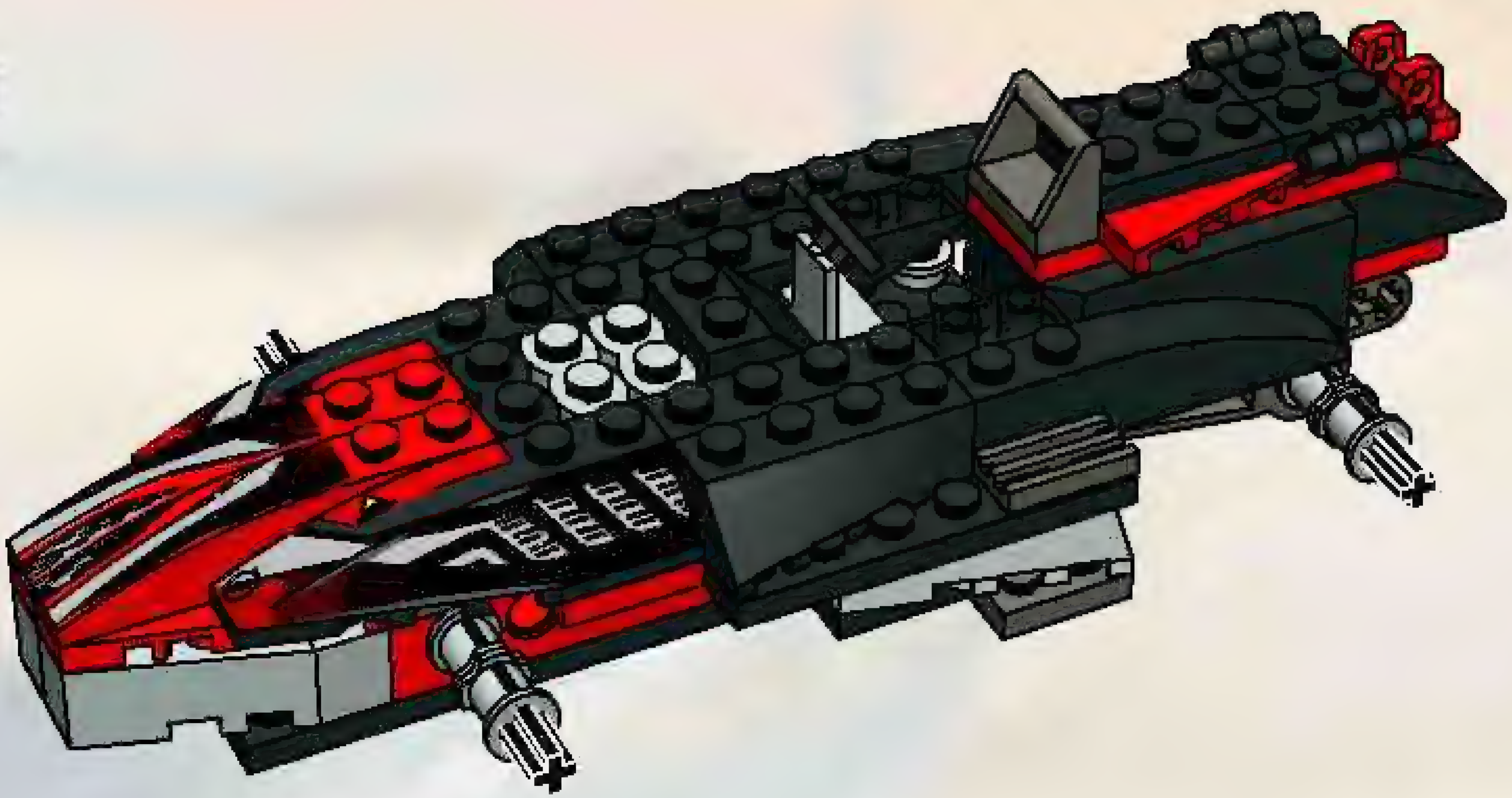

13

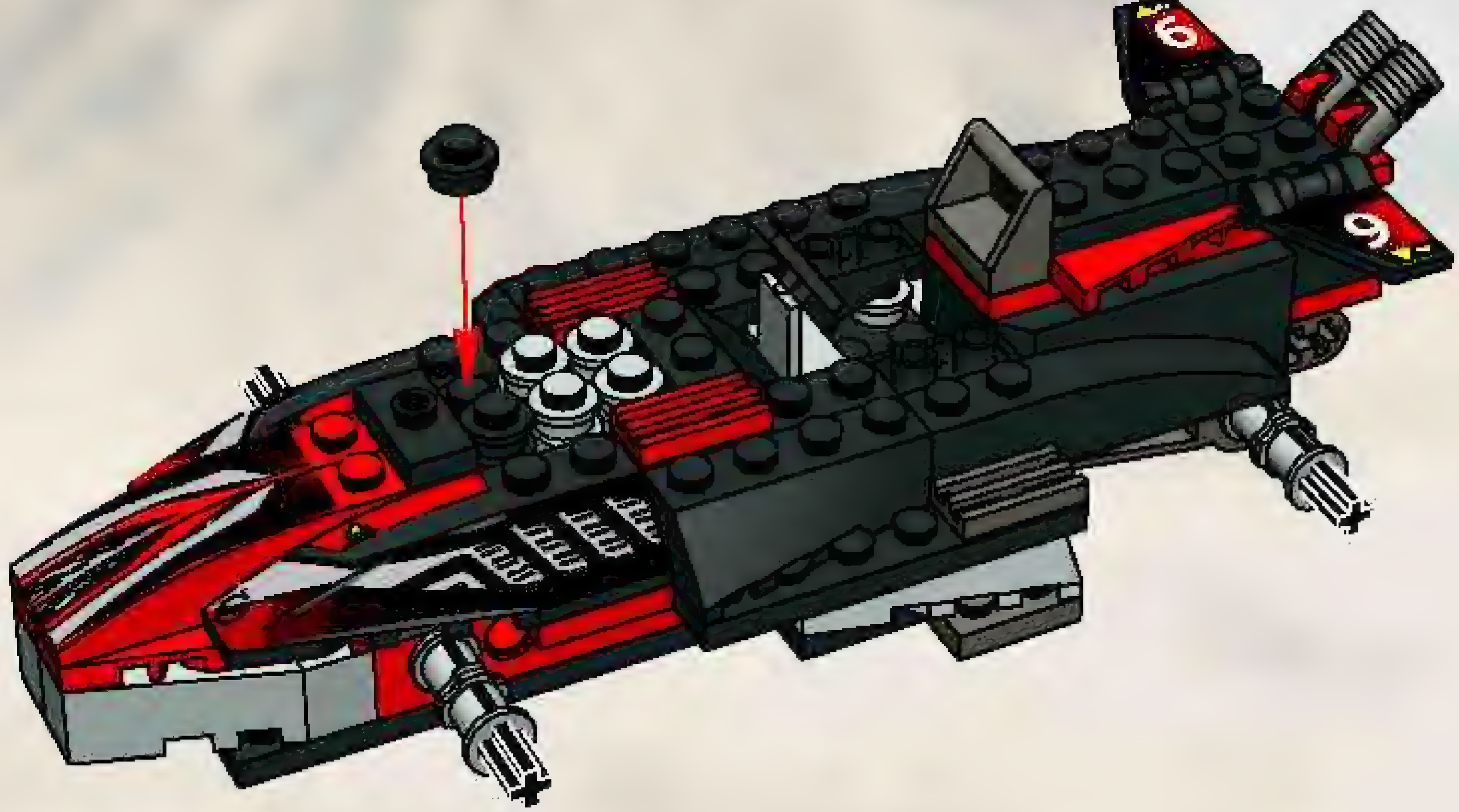

14

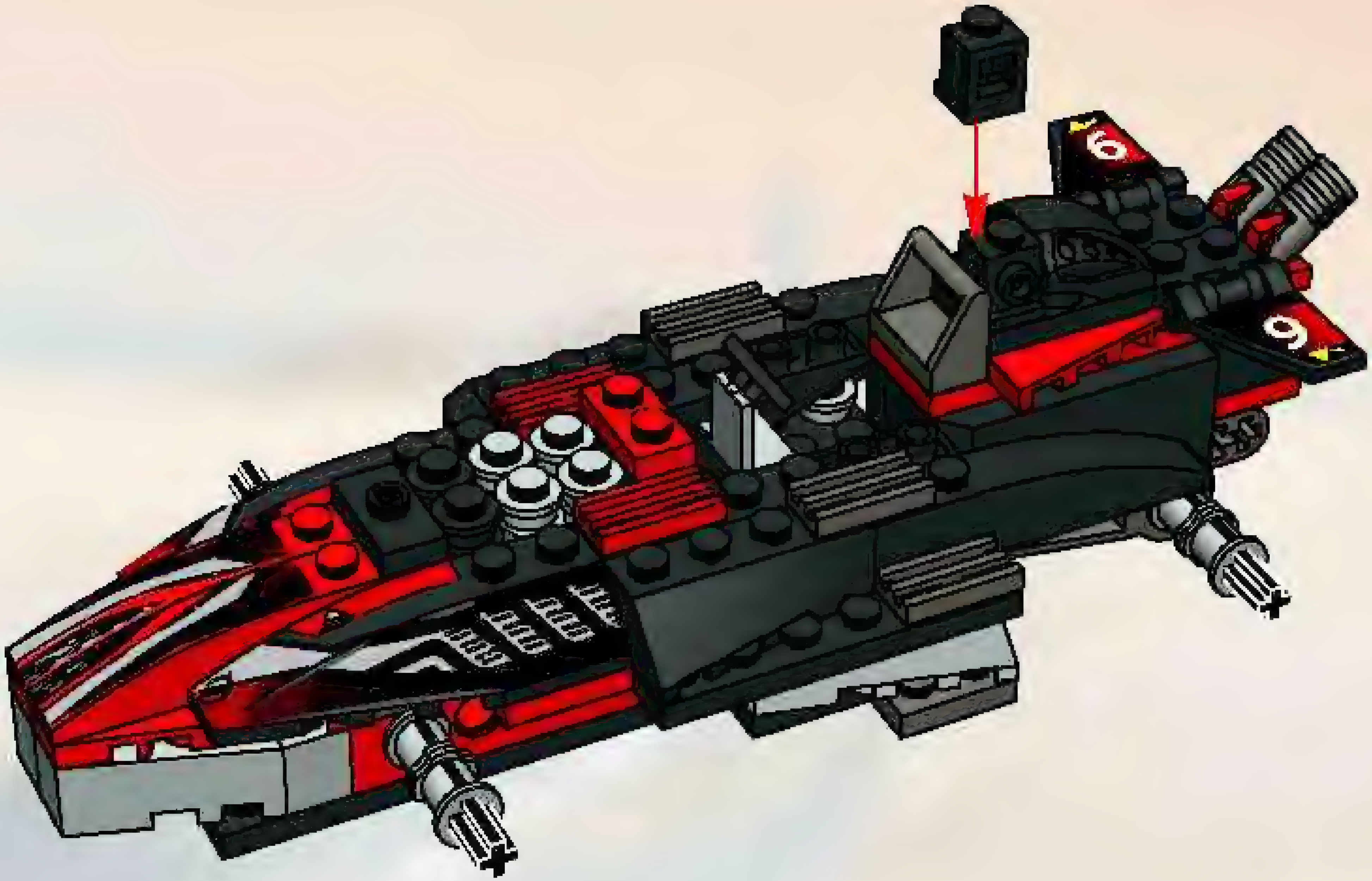

15

7
pull-back
motor

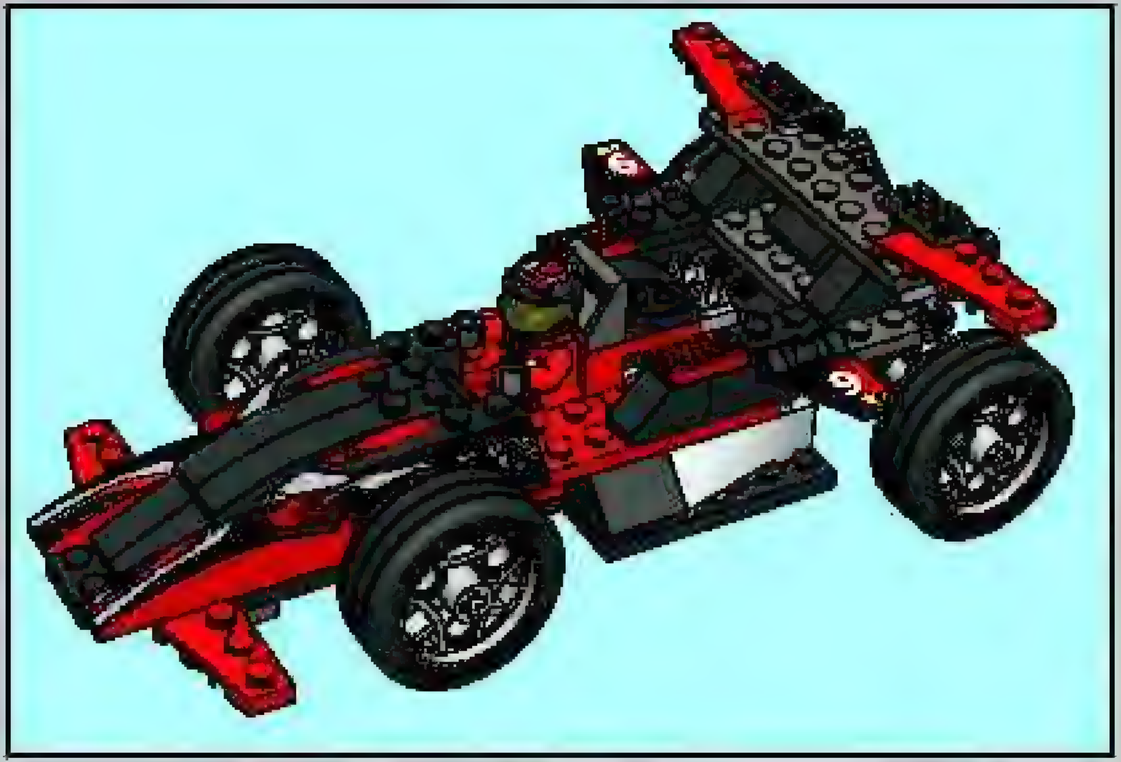

1

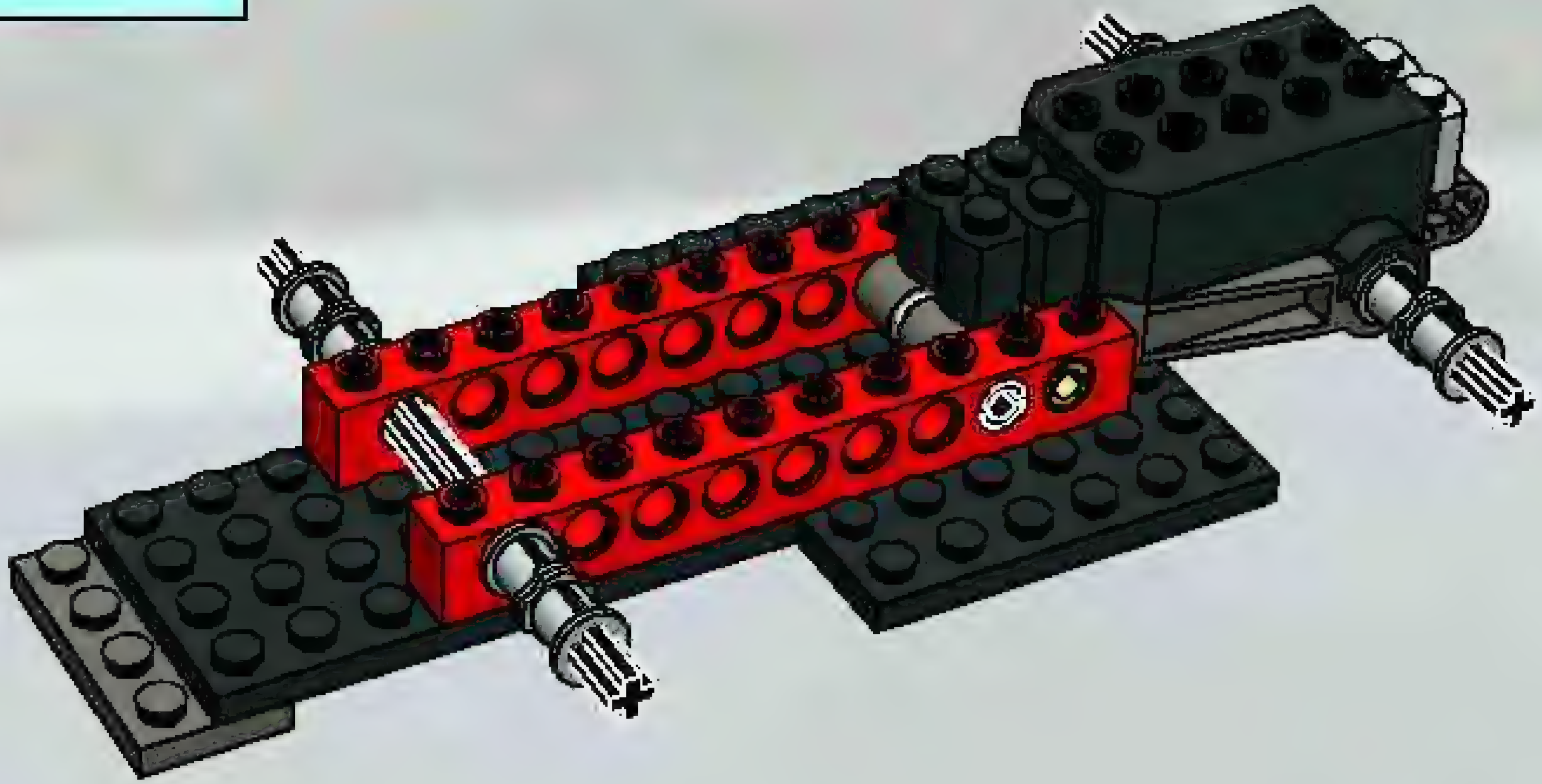

2

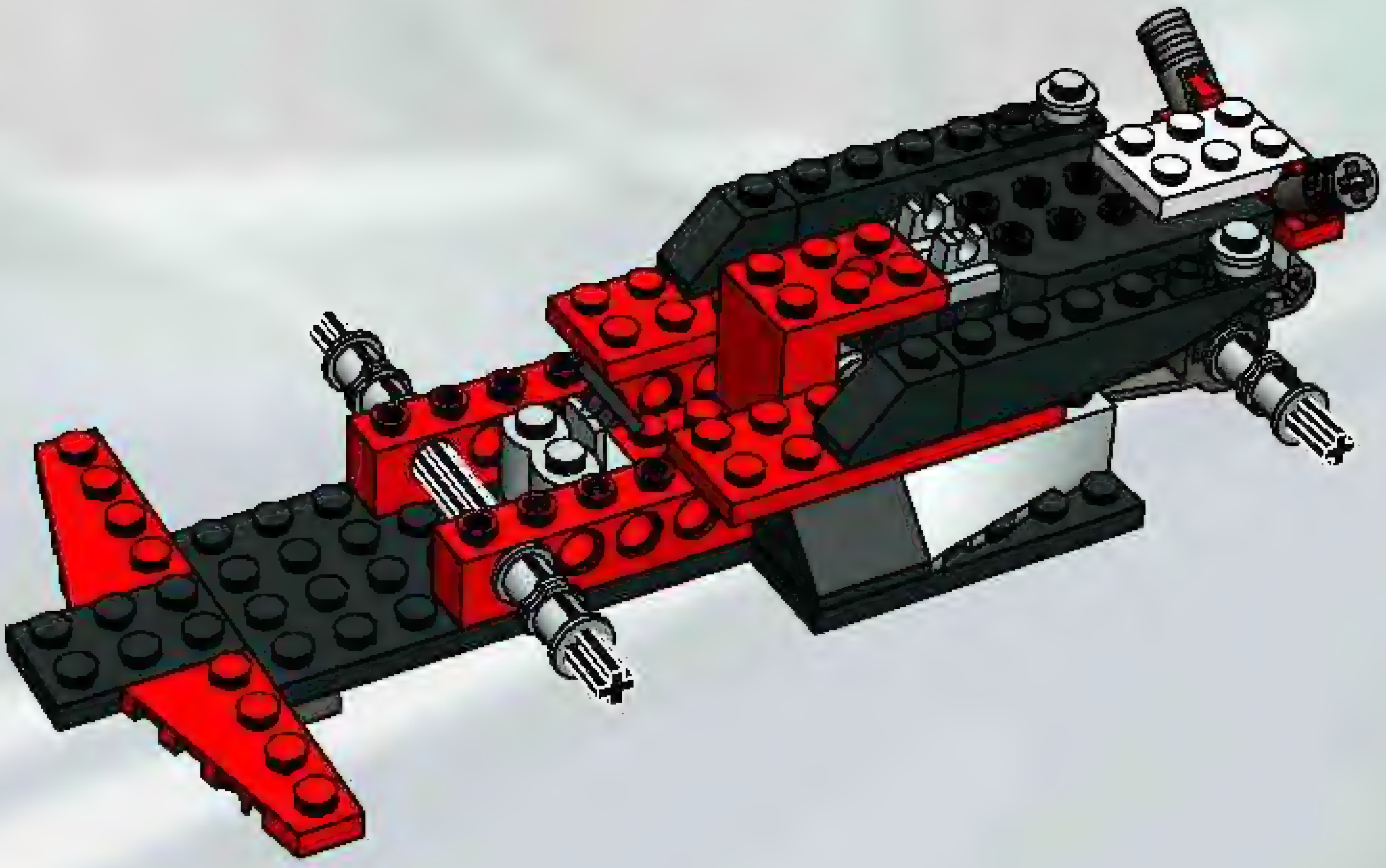

3

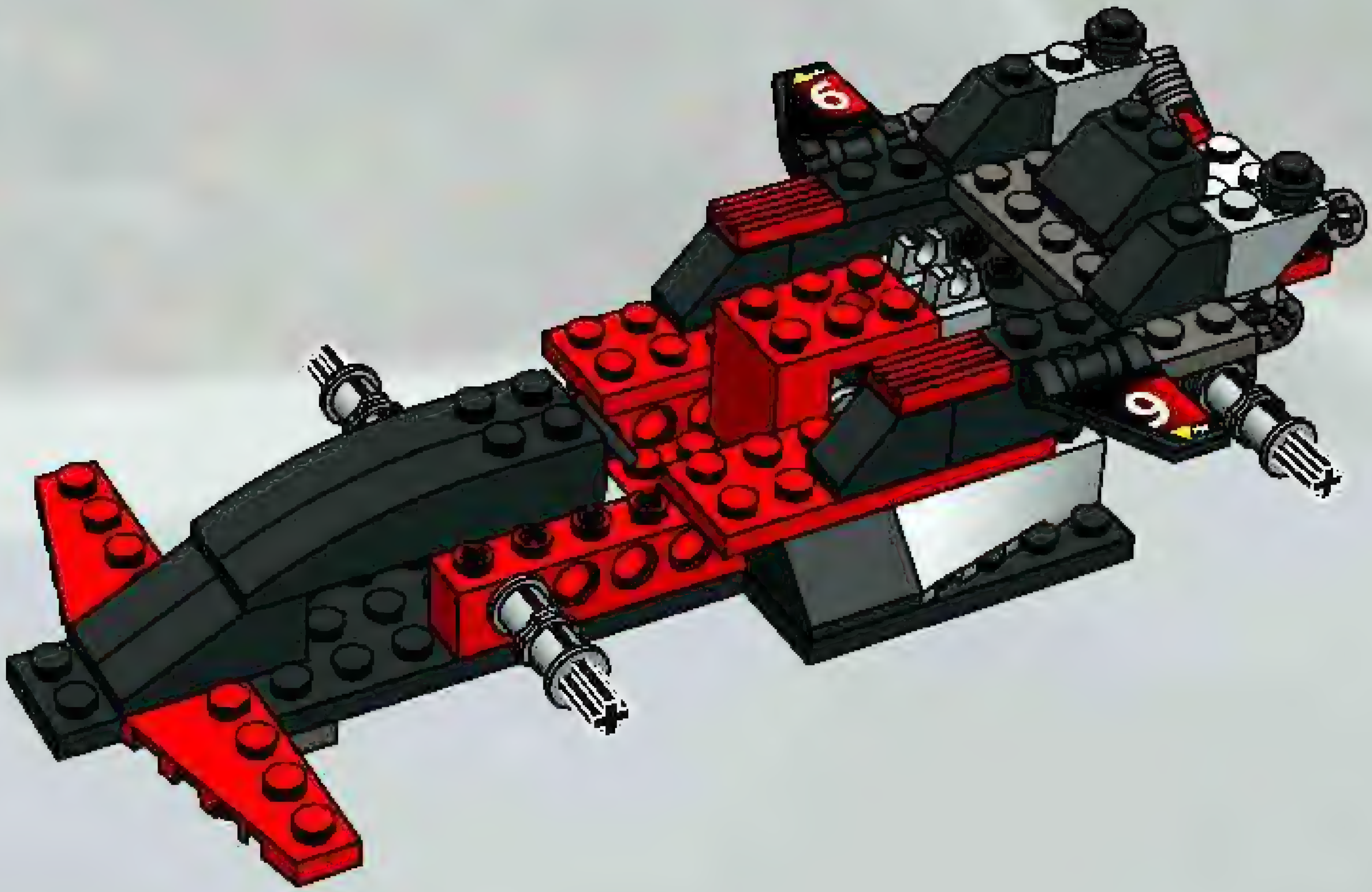

4

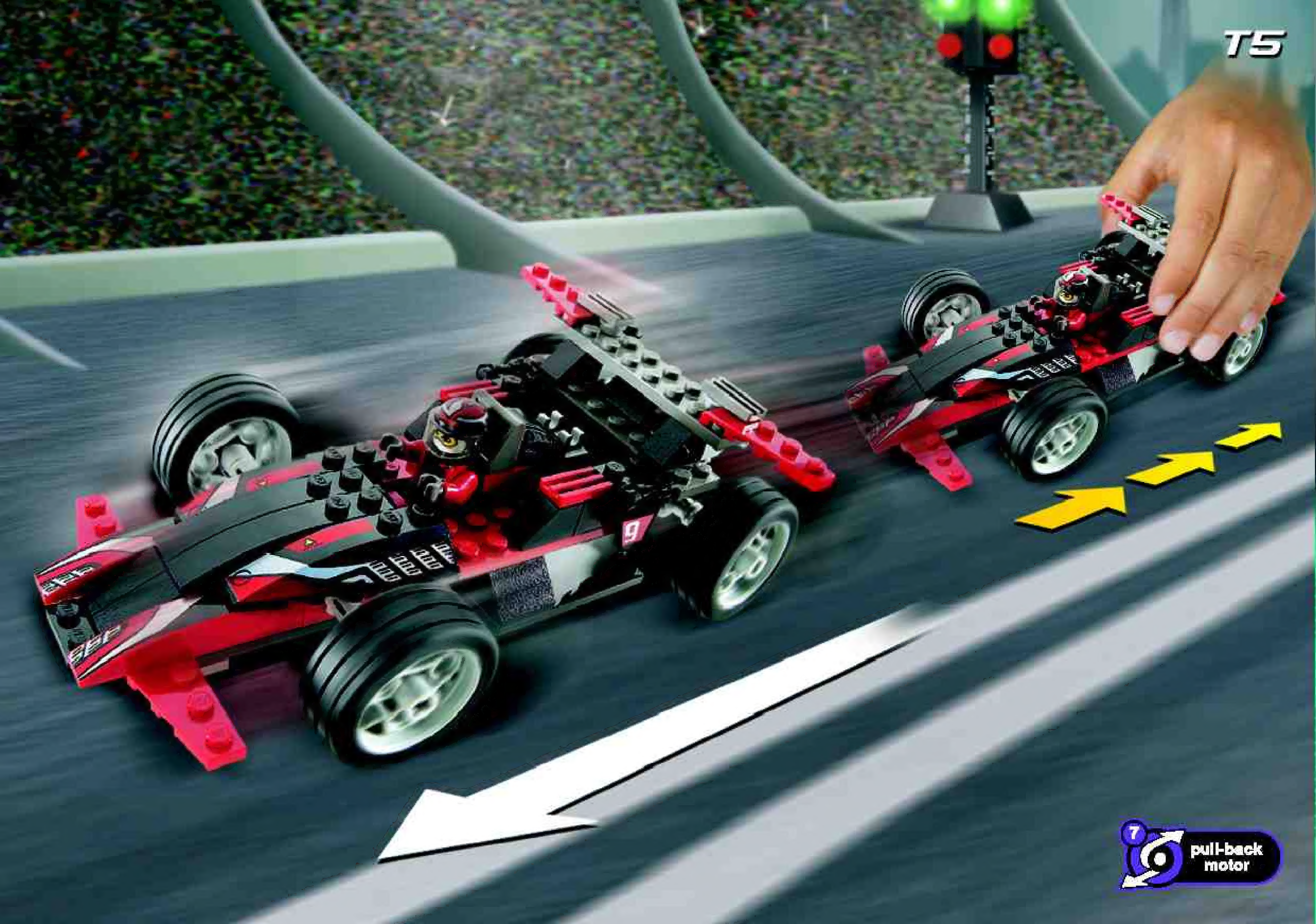
T5
7
pull-back
motor

T6
8371
pull-back motor
T5
8355
pull-back motor
T2
8356
pull-back motor
T3
T7
8370
pull-back motor
8354
pull-back motor
SERVICE
www.lego.com
www.LEGO.com
2003 The LEGO Group.

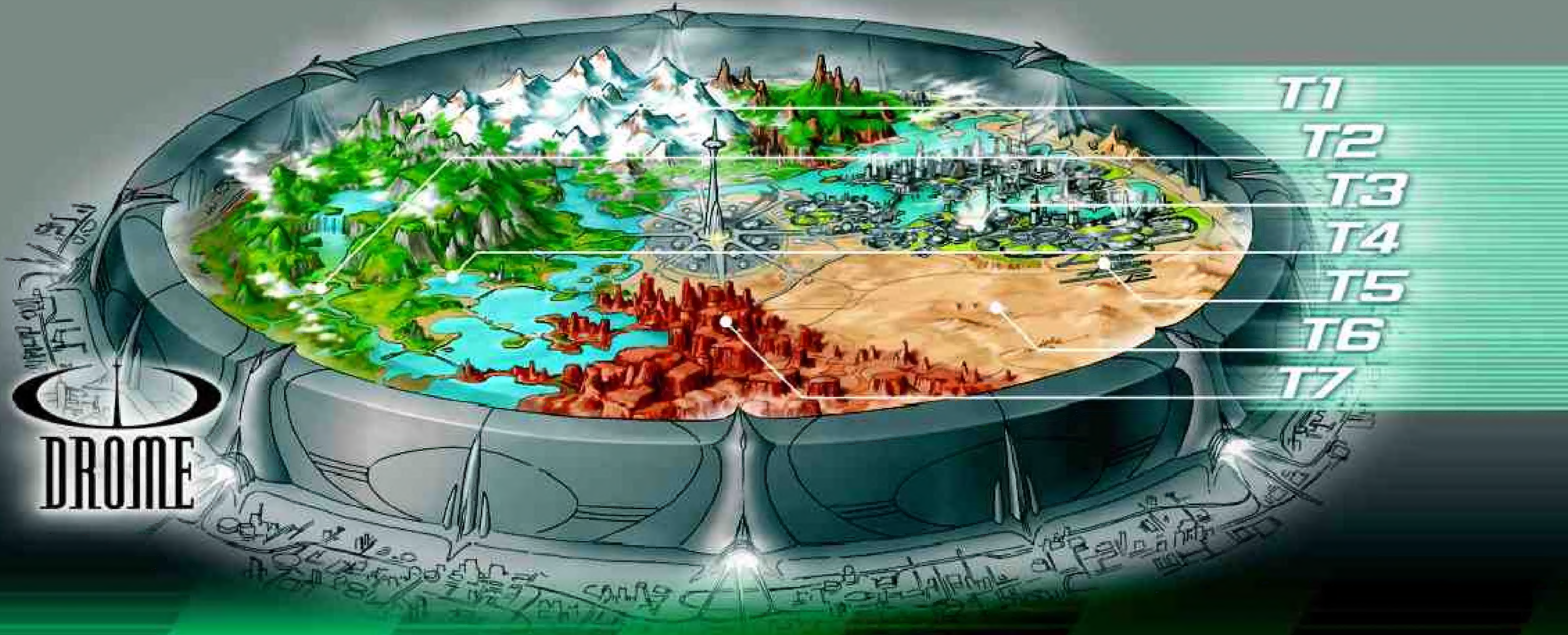

www.LEGO.com/racers